Council adopted as Policy by Resolution 200
August 2004.

INFRASTRUCTURE DESIGN
SERVICES, INC.

11006 East 51st Street
Tulsa, Oklahoma 74146

918.664.5500 Voice
918.664.5501 Fax

June 25, 2004

Mr. Wade Burkholder
City Planner
City of Coweta
P.O. Box 850
Coweta, OK 74429

RE: CONSTRUCTION STANDARD DRAWINGS

Dear Mr. Burkholder

Infrastructure Design Services, Inc. has reviewed the proposed City Construction Standards for compliancy with the design criteria as well as for completeness. Enclosed is a complete set of the standards with our comments. Feel free to incorporate or disregard any comment as you see necessary.

In addition, Construction Standards of this nature are generally adopted by a local government through policy. This means of authorization allows the community the flexibility to enact or disregard the standard when the situation deems it appropriate without having to obtain a variance. Furthermore, it allows the community to add or delete standards as it sees necessary without having to change the ordinance.

We definitely believe that these standards will help the developers construct public utilities and street in a common and consistent manner. If you have any questions or comments, please contact me at 664-5500.

Sincerely,

Kenneth D. Schwab

Kenneth D. Schwab, P.E, C.F.M.
Principal

KDS/ks

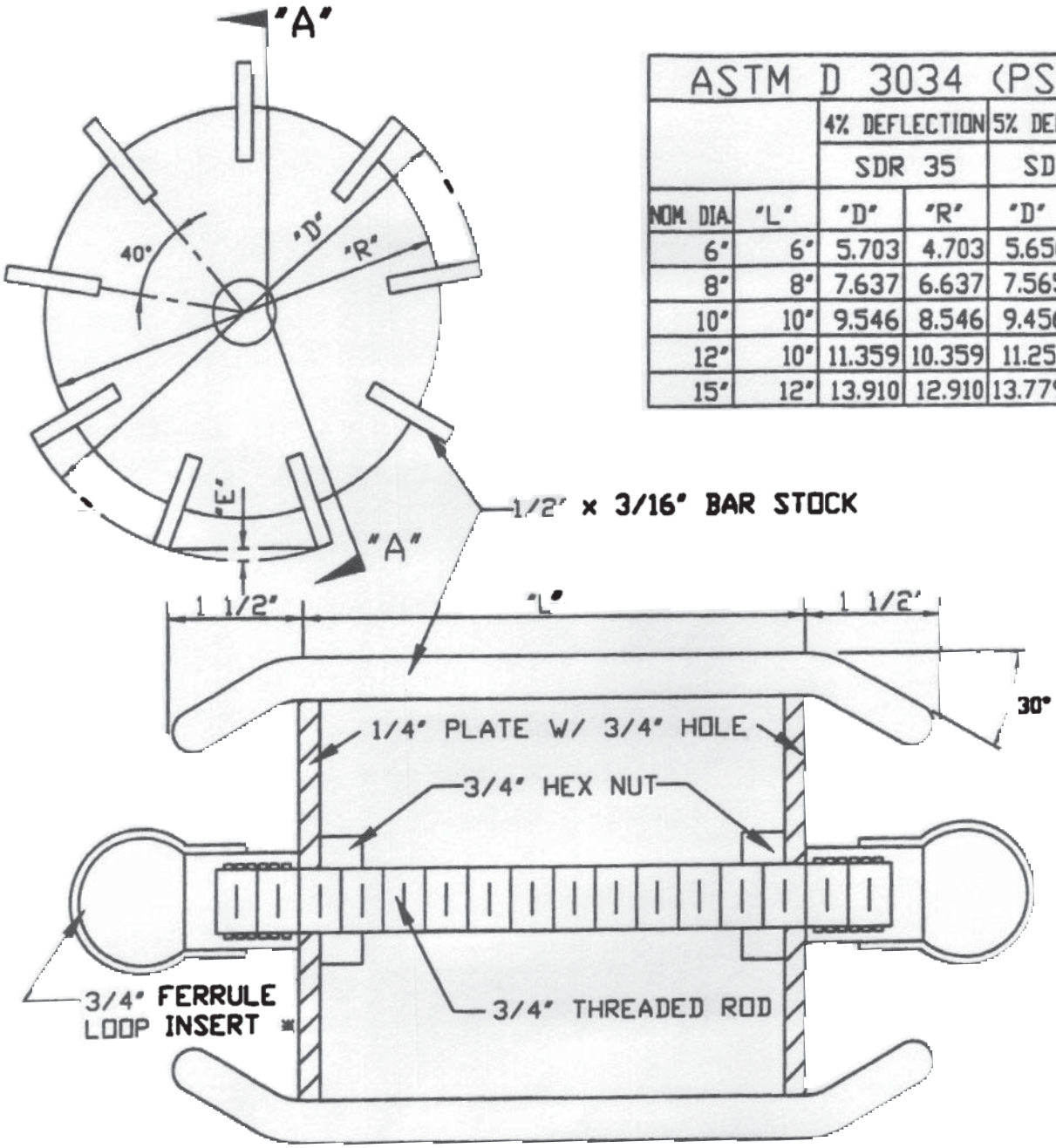

ASTM D 3034 (PSM)					
		4% DEFLECTION		5% DEFLECTION	
		SDR 35		SDR 35	
NOM. DIA.	"L"	"D"	"R"	"D"	"R"
6"	6"	5.703	4.703	5.650	4.650
8"	8"	7.637	6.637	7.565	6.565
10"	10"	9.546	8.546	9.456	8.456
12"	10"	11.359	10.359	11.251	10.251
15"	12"	13.910	12.910	13.779	12.779

SECTION "A"-"A"

MIN. PLA. DIAMETER
GAGE DIAMETER HAS BEEN CALCULATED TO CORRECT CHORD LENGTH ERROR "E"

NOTES:

1. USE 4% GAGE IF DEFLECTION TEST IS MADE WITHIN 6 MONTHS OF INSTALLATION. USE 5% THEREAFTER
2. MARK ALL GAGES WITH ASTM SPECIFICATION NUMBER, SDR NUMBER AND DEFLECTION.
3. THE 1/2" BAR STOCK ON THE EDGE PROVIDES CLEARANCE TO PASS SMALL AMOUNTS OF SOIL WHICH MAY BE IN PIPE.

* BURKE CONCRETE ACCESSORIES INC.

PVC SEWER DEFLECTION GAGE

CITY OF COWETA	STANDARD DRAWING: STD SS 12
	LAST REVISION DATE:

DRAWN BY:	CHECKED BY:	APPROVED:	DATE

NOTES:

1. SLIDING TRENCH SUPPORTS SHALL NOT BE PLACED BELOW THE TOP OF PIPE.
2. WATER TABLE CRADLE SHALL BE INSTALLED FOR THE FULL WITH OF THE TRENCH EXCAVATION.
3. FOR RIGID PIPES USE THE STD. TRENCH WIDTH. SEE TABLE FOR FLEXIBLE PIPES

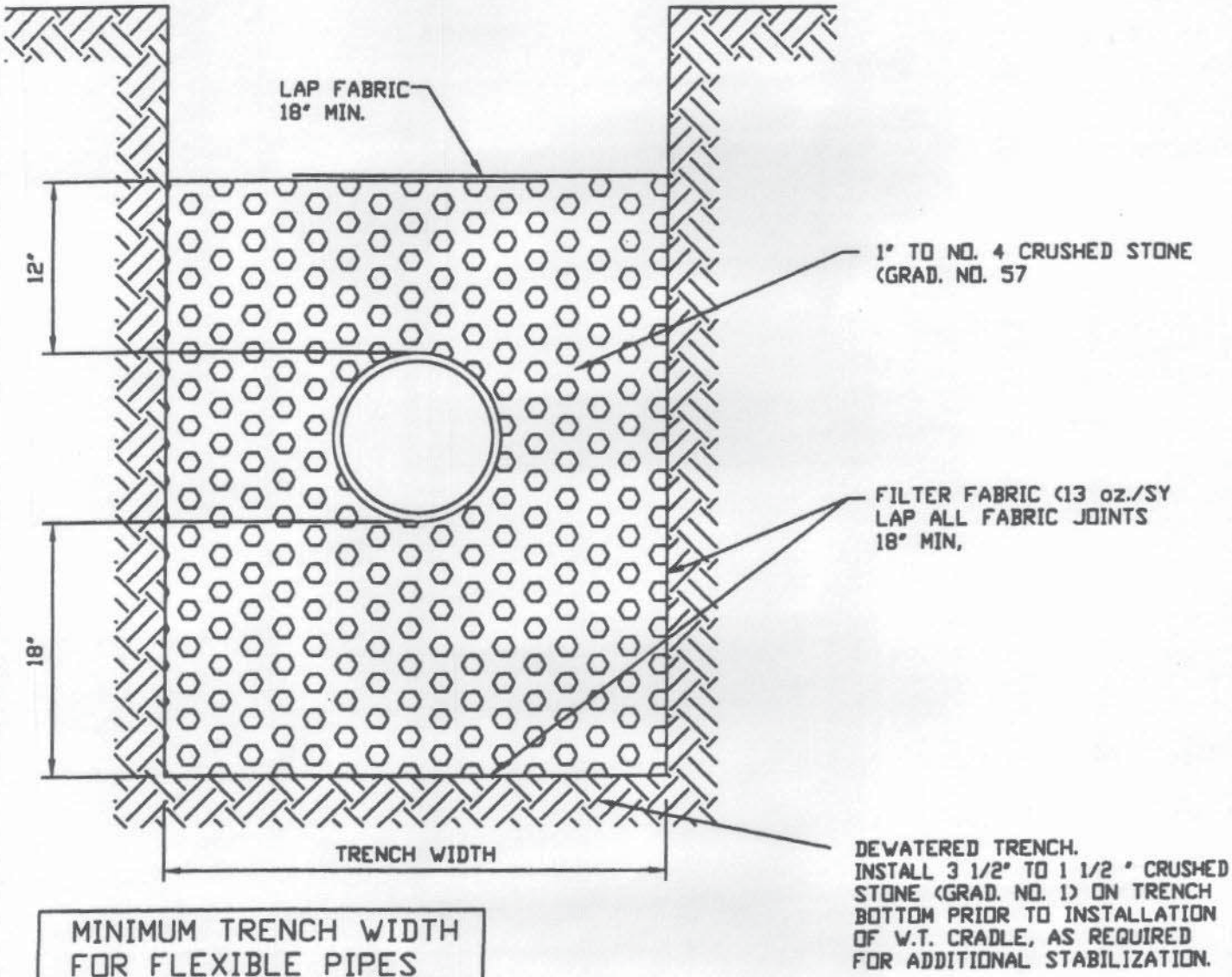

MINIMUM TRENCH WIDTH FOR FLEXIBLE PIPES	
PIPE I.D.	MIN. TRENCH WIDTH
8" - 12"	3' - 0"
14" - 18"	4' - 6"
20" - 24"	6' - 0"
26" - 30"	7' - 6"
32" - 36"	9' - 0"

NOTE:
FLEXIBLE PIPES ARE PE. ASTM F894 AND PVC. ASTM D3034 & ASTM F679 & ASTM F794 FOR ALL OTHER PIPES USE THE STANDARD TRENCH WIDTH.

WATER TABLE CRADLE FOR FLEXIBLE PIPE

CITY OF COWETA	STANDARD DRAWING: STD SS 13
	LAST REVISION DATE:

DRAWN BY:	CHECKED BY:	APPROVED:	DATE:

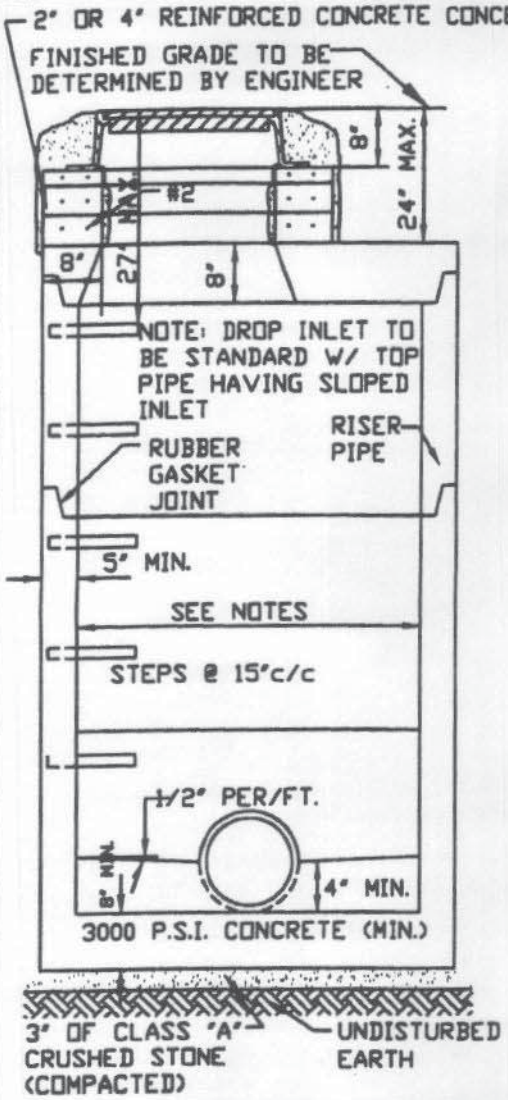

PRECAST MANHOLE
FLAT TOP

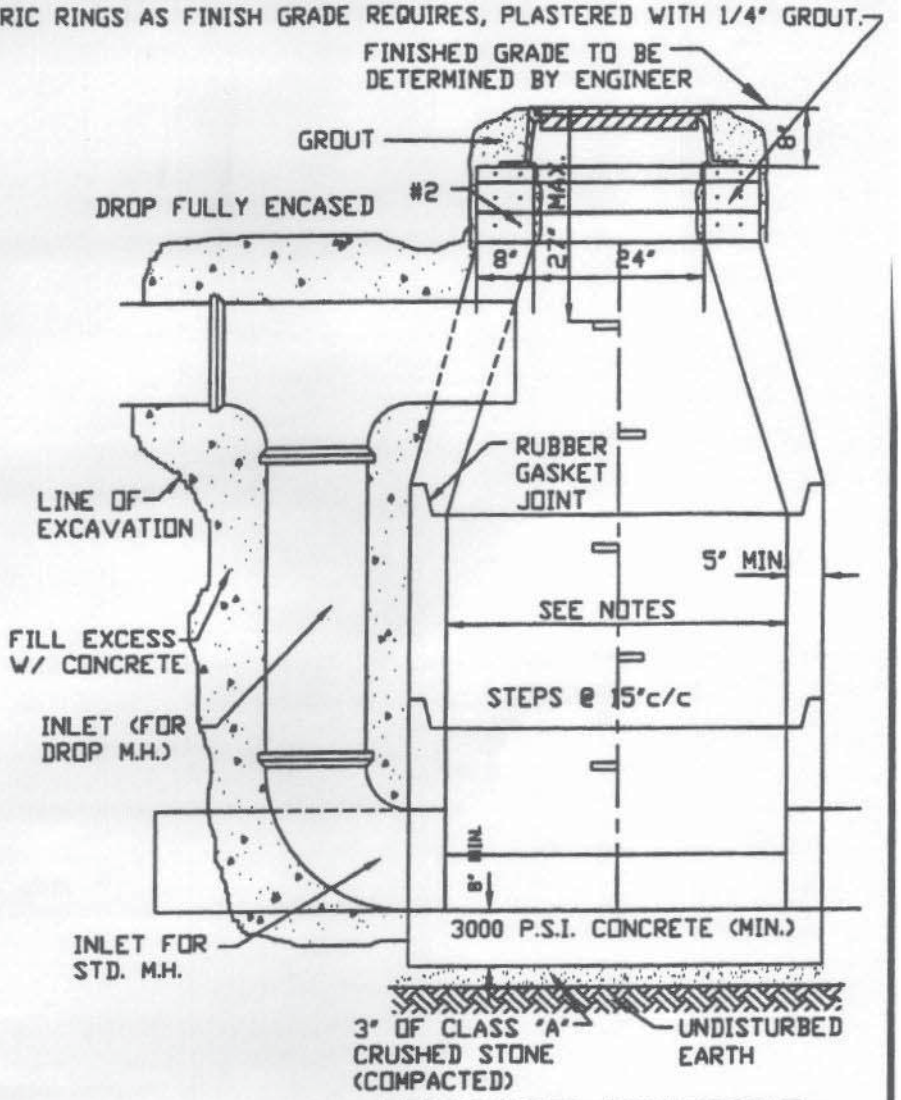

PRECAST MANHOLE
TAPERED TOP

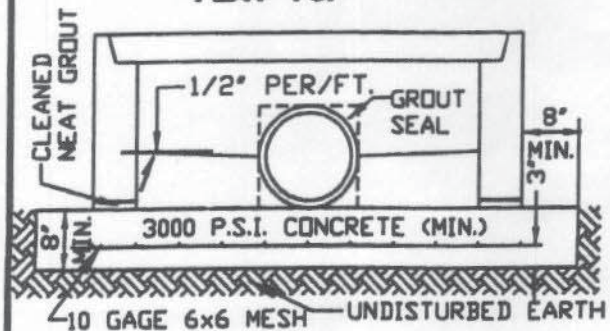

CAST-IN-PLACE BASE

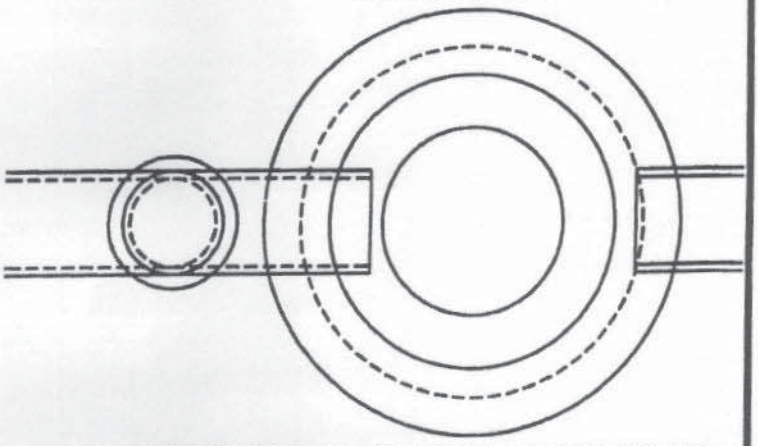

STANDARD & DROP MANHOLE

NOTES:
1. SHALL CONFORM TO CURRENT ASTM C478.
2. 8" TO 18" PIPE, 4' ID MANHOLE REQUIRED.
3. 21" TO 27" PIPE, 5' ID MANHOLE REQUIRED.
4. OVER 27" PIPE MANHOLE ID AS SPECIFIED BY ENGINEER.
5. MANHOLES LESS THAN 4'-6" IN HEIGHT SHALL HAVE A FULL 4'-0" ID OR LARGER FROM TOP TO BOTTOM.

PRECAST MANHOLE DETAIL

CITY OF COWETA	STANDARD DRAWING: STD SS 08
	LAST REVISION DATE:

DRAWN BY:	CHECKED BY:	APPROVED:	DATE:

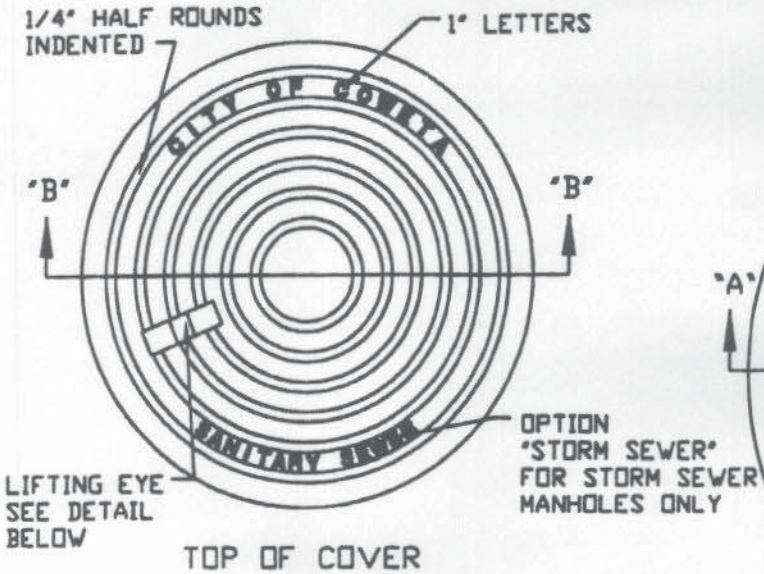

TOP OF COVER

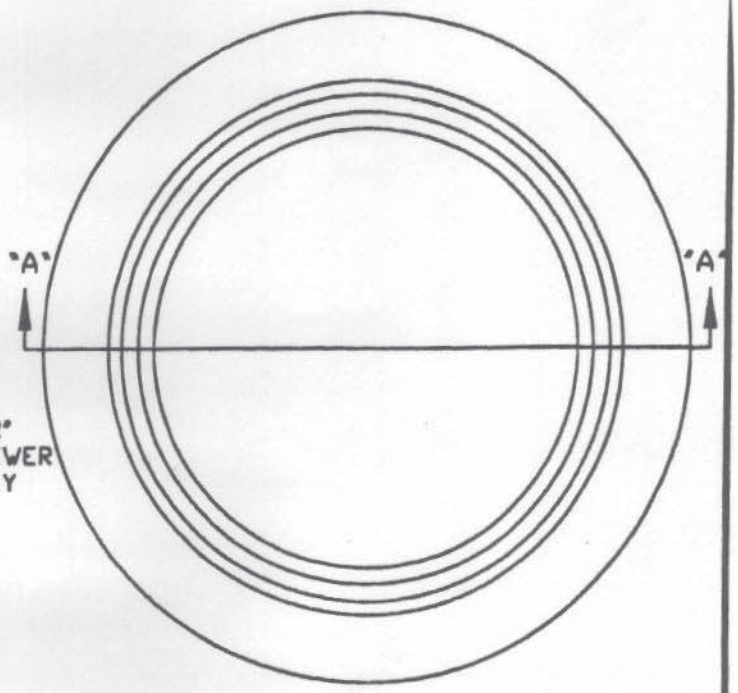

PLAN

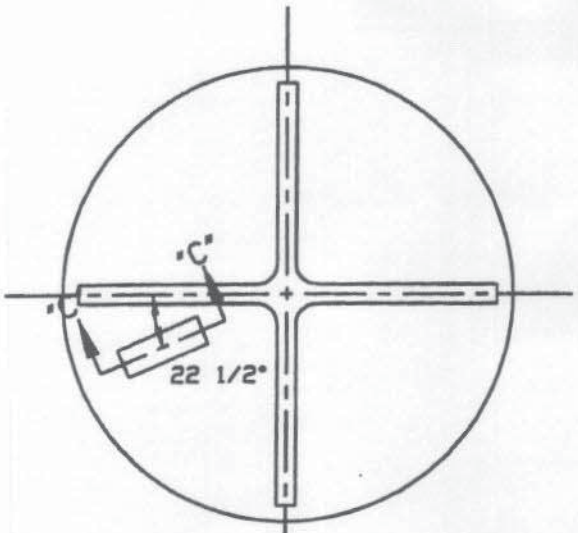

BOTTOM OF COVER

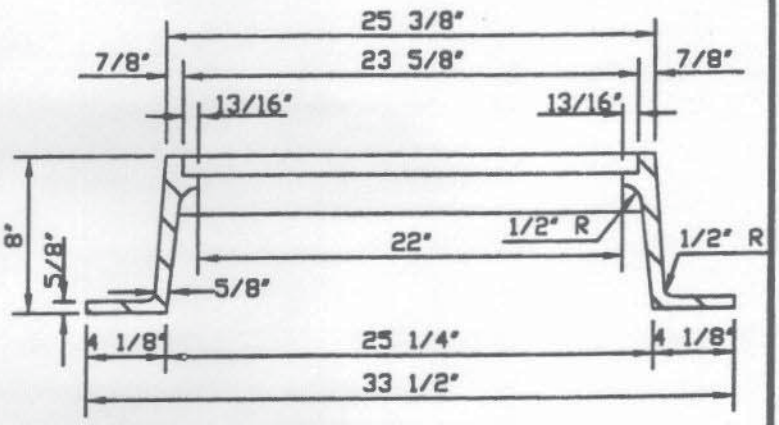

SECTION "A"-"A"

MANHOLE FRAME

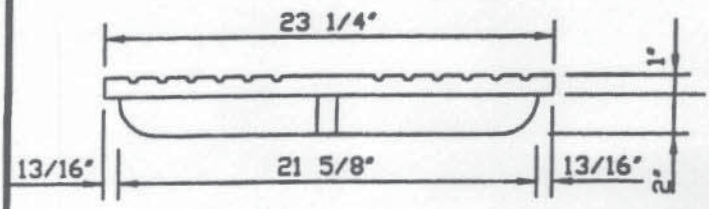

SECTION "B"-"B"

MANHOLE COVER

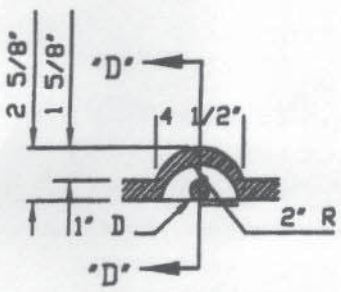

SECTION "C"-"C"

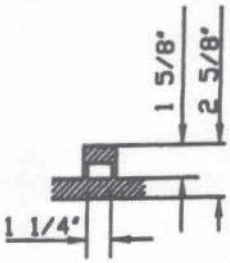

SEDTION "D"-"D"

LIFTING EYE DETAIL

MANHOLE FRAME AND COVER DETAIL

CITY OF COWETA		STANDARD DRAWING: STD SS 09	
		LAST REVISION DATE:	
DRAWN BY:	CHECKED BY:	APPROVED:	DATE:

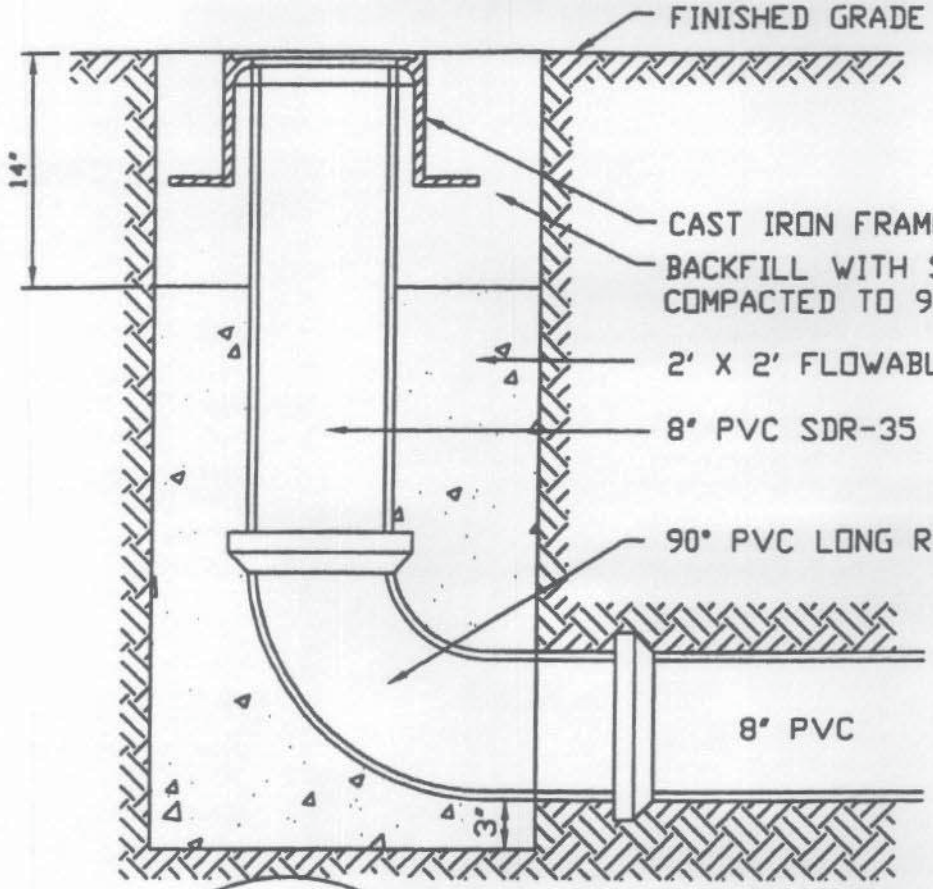

LAMPHOLE DETAIL

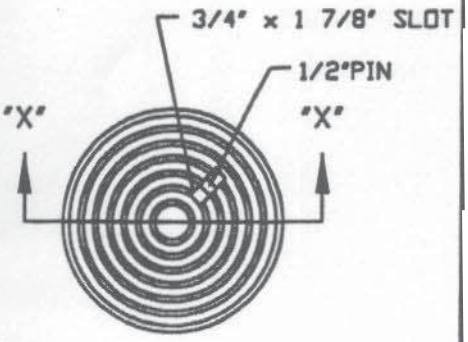

TOP OF COVER

BOTTOM OF COVER

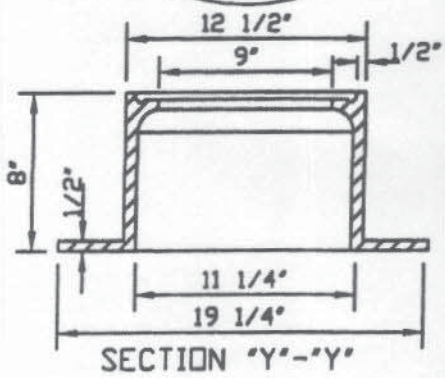

SECTION "Y"-"Y"

LAMPHOLE FRAME

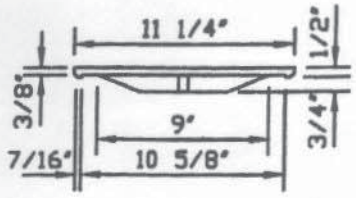

SECTION "X"-"X"

LAMPHOLE COVER

LAMPHOLE, FRAME & COVER DETAIL

CITY OF COWETA	STANDARD DRAWING: STD SS 10
	LAST REVISION DATE:

DRAWN BY:	CHECKED BY:	APPROVED:	DATE:

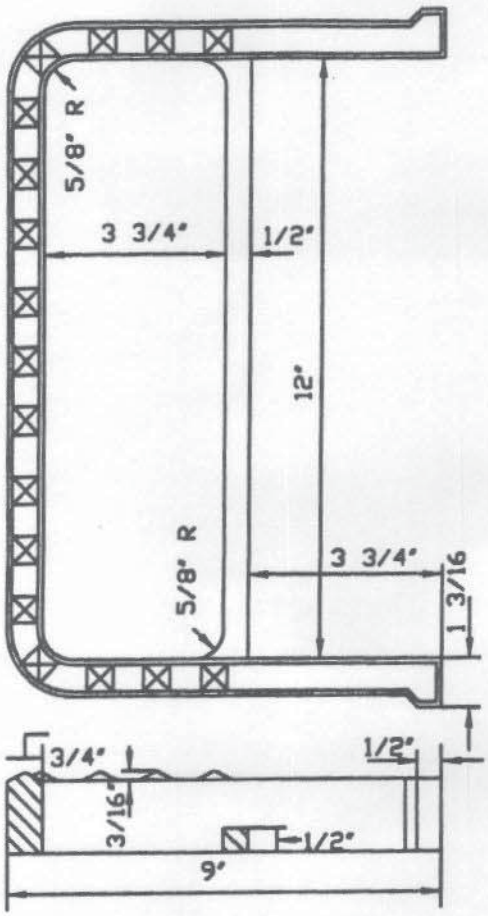

LARGE STEP

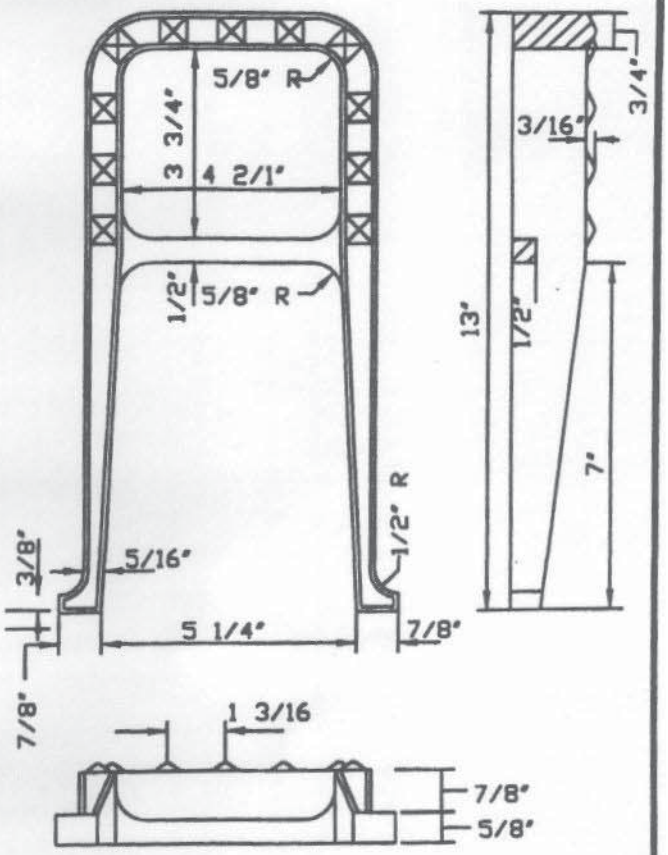

STANDARD STEP

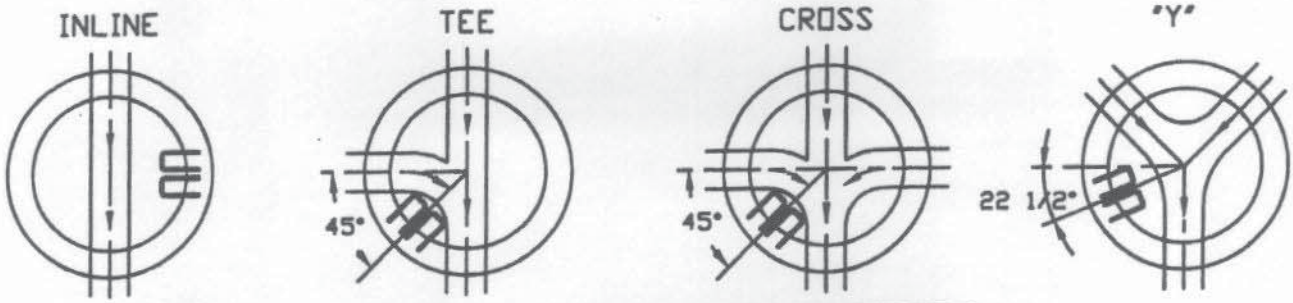

LOCATION OF MANHOLE STEPS

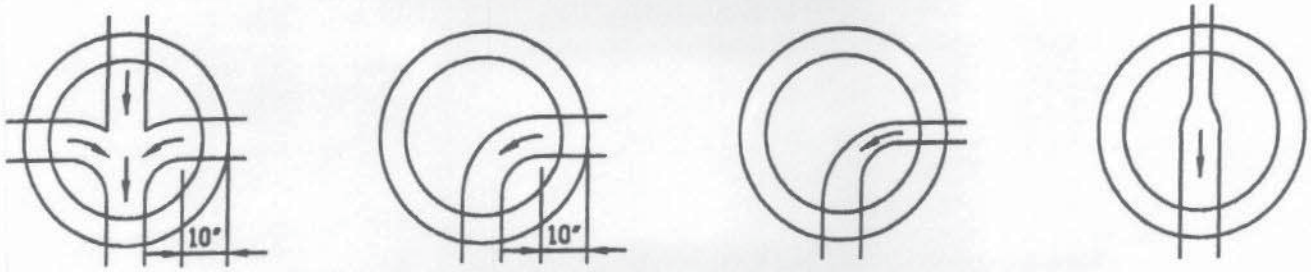

TYPICAL MANHOLE INVERT DETAIL

MANHOLE STEPS & INVERT DETAILS

CITY OF COWETA	STANDARD DRAWING: STD SS 11
	LAST REVISION DATE:

DRAWN BY:	CHECKED BY:	APPROVED:	DATE:

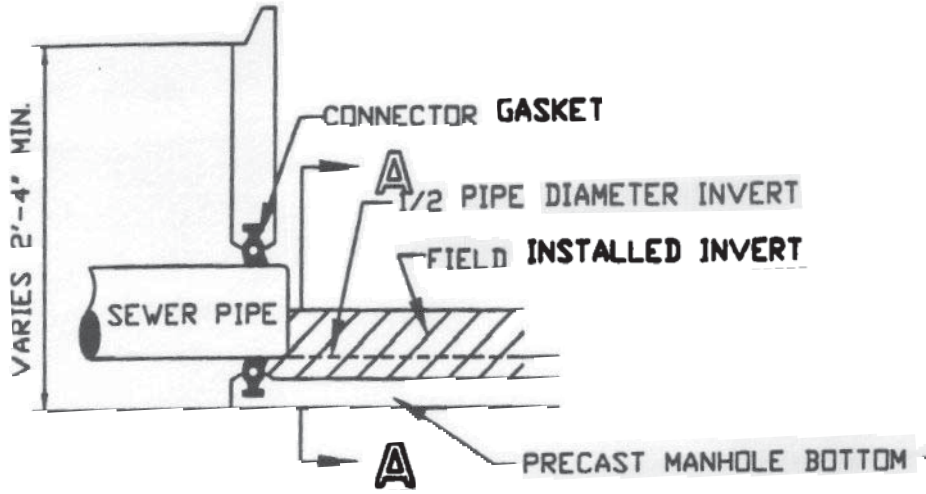

TYPE A MANHOLE

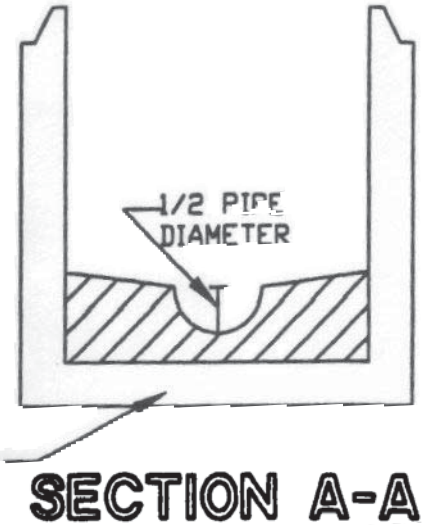

SECTION A-A

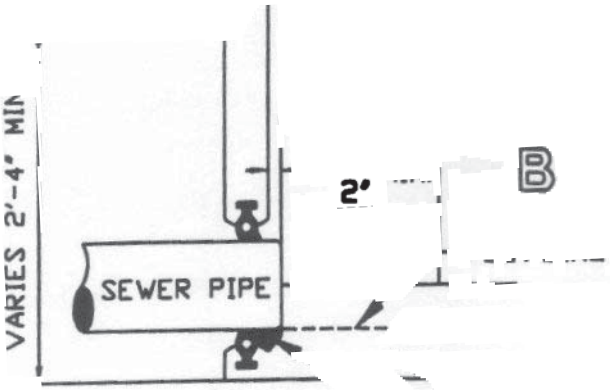

TYPE B MANHOLE

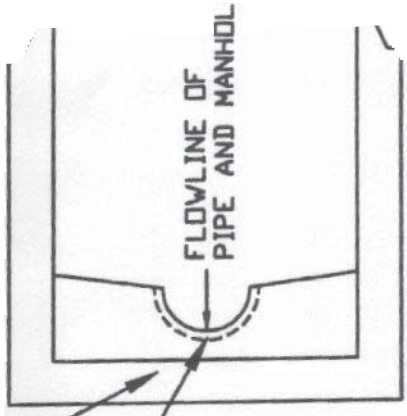

SECTION B-B

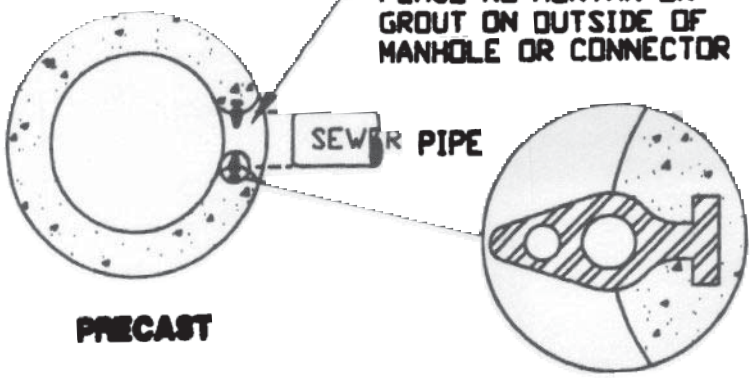

PRECAST

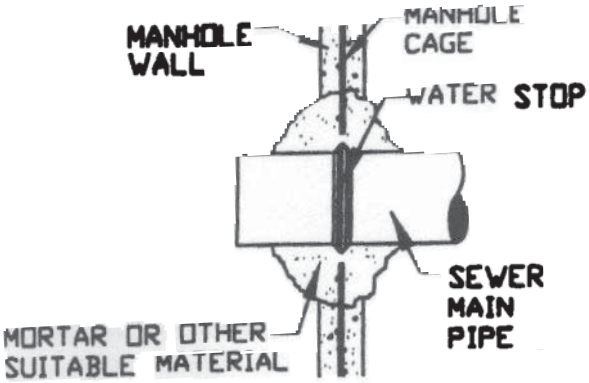

INSTALLED IN THE FIELD

SANITARY SEWER MANHOLE PIPE CONNECTOR DETAILS

CITY OF COWETA	STANDARD DRAWING: STD SS 06
DRAWN BY: CHECKED BY: APPROVED:	LAST REVISION DATE:

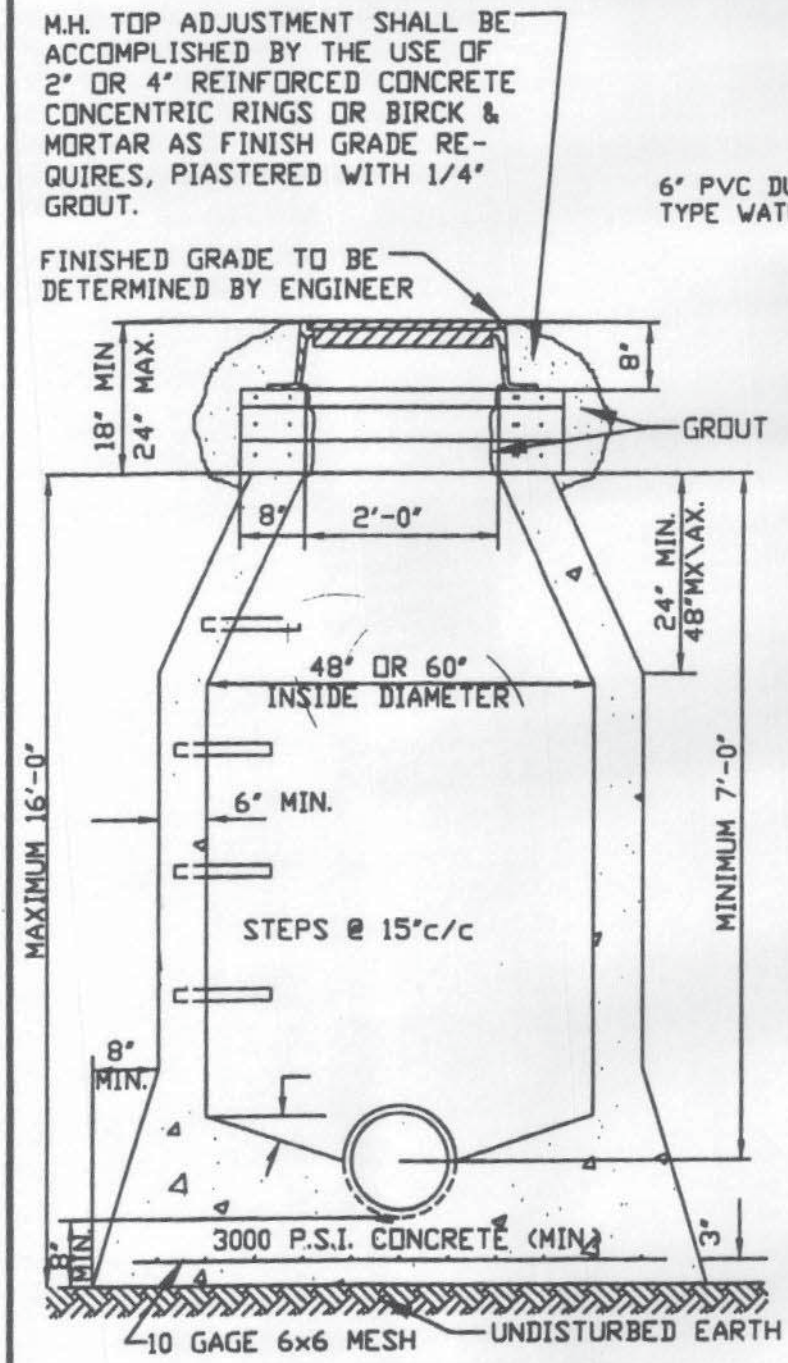

MONOLITHIC CONSTRUCTION

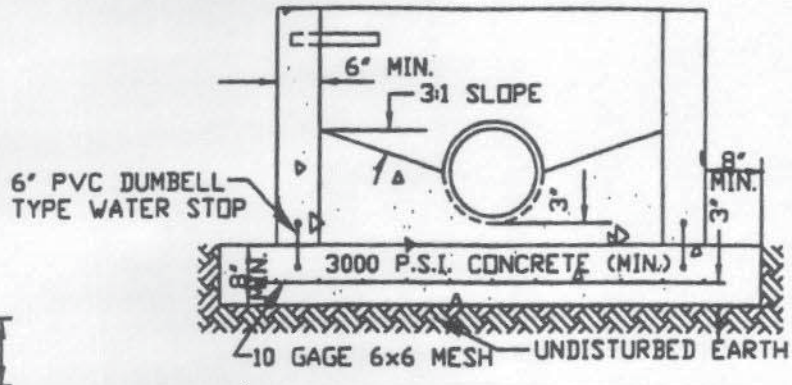

STAGE CONSTRUCTION
ALTERNATE 1

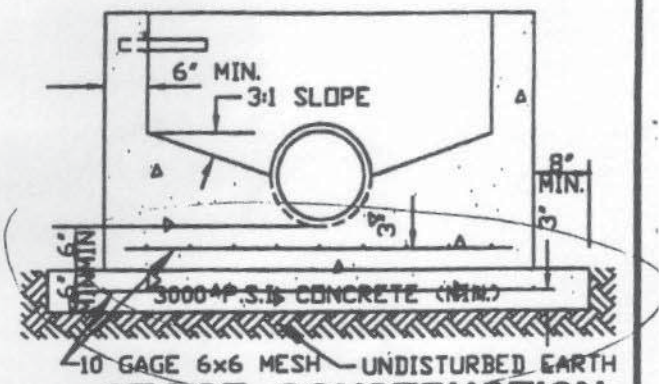

STAGE CONSTRUCTION
ALTERNATE 2

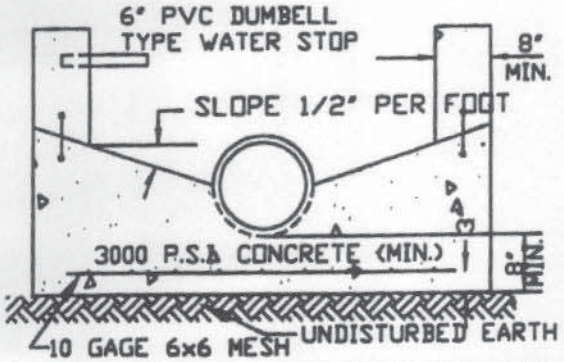

STAGE CONSTRUCTION
ALTERNATE 3

NOTES:
1. STEP DETAIL SHOWN ON STANDARD DRAWING SS 11.
2. LOW SLUMP CONCRETE SHALL BE PLACED IN THE FOOTINGS AND LOWER WALLS, AND SHALL BE PLACED AND VIBRATED IN ONE FOOT LIFTS.
3. AN INSPECTOR MUST BE PRESENT BEFORE AND DURING THE PLACING OF THE CONCRETE.
4. THIS MANHOLE SHALL NOT BE USED IN PAVED STREETS OR OTHER TRAVELED AREAS.
5. THE CONCRETE MUST SET FOR 48 HOURS BEFORE PIPE INSIDE OF MANHOLE IS TRIMMED.
6. (ALTERNATE 3) INVERT MUST BE FORMED AT TIME OF BOTTOM POUR.
7. WATER STOPS MAY BE ELIMINATED IF BARREL OF MANHOLE IS POURED WITHIN 4 HOURS AFTER BASE IS CLEANED OF ALL MUD, SILT AND DEBRIS.

CAST IN PLACE MANHOLE DETAIL

CITY OF COWETA	STANDARD DRAWING: STD SS 07
	LAST REVISION DATE:

DRAWN BY:	CHECKED BY:	APPROVED:	DATE

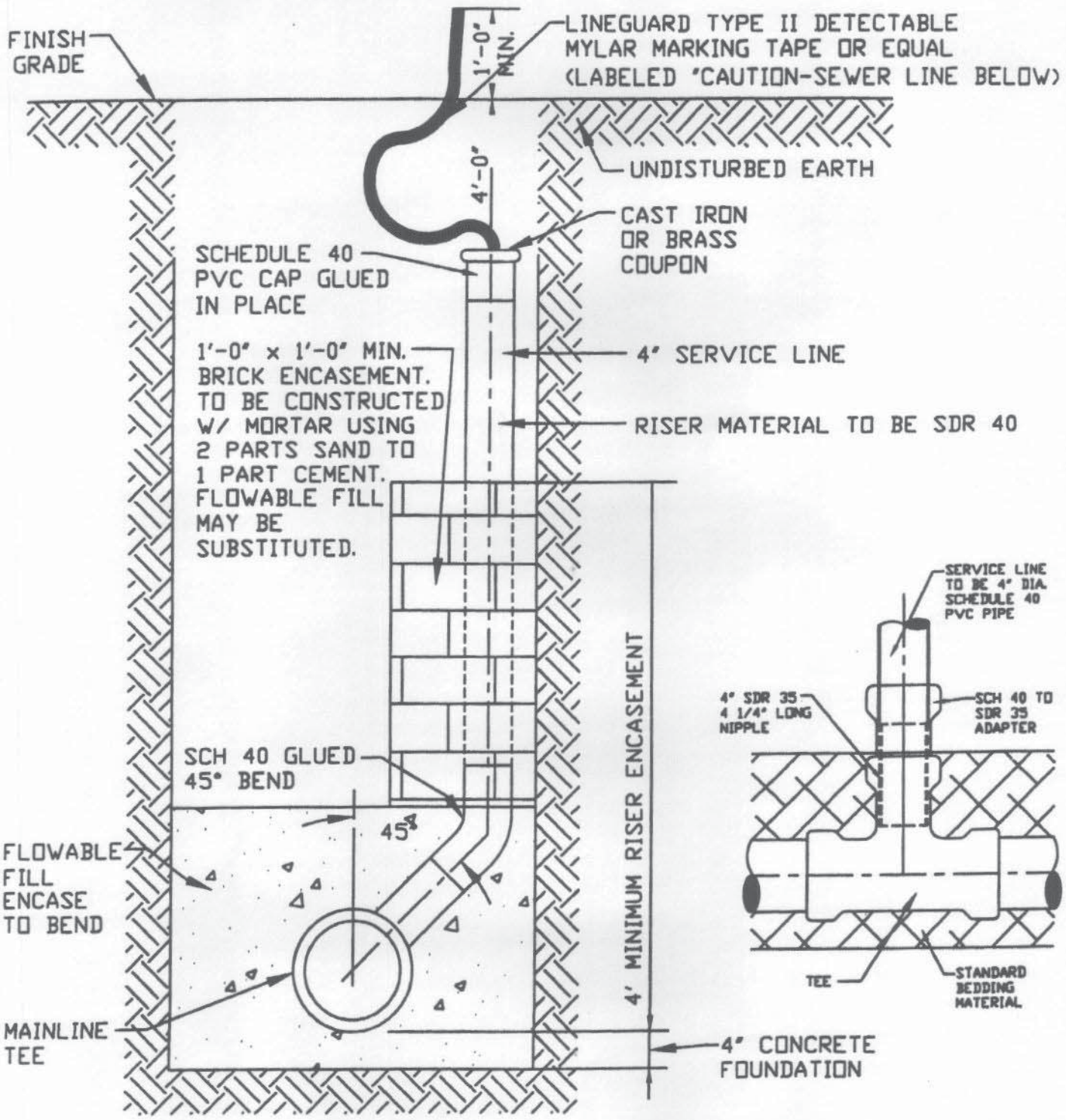

SANITARY SEWER RISER DETAIL
OVER 12' DEEP
(NARROW TRENCH)

CITY OF COWETA		STANDARD DRAWING: STD SS 05	
		LAST REVISION DATE:	
DRAWN BY:	CHECKED BY:	APPROVED:	DATE:

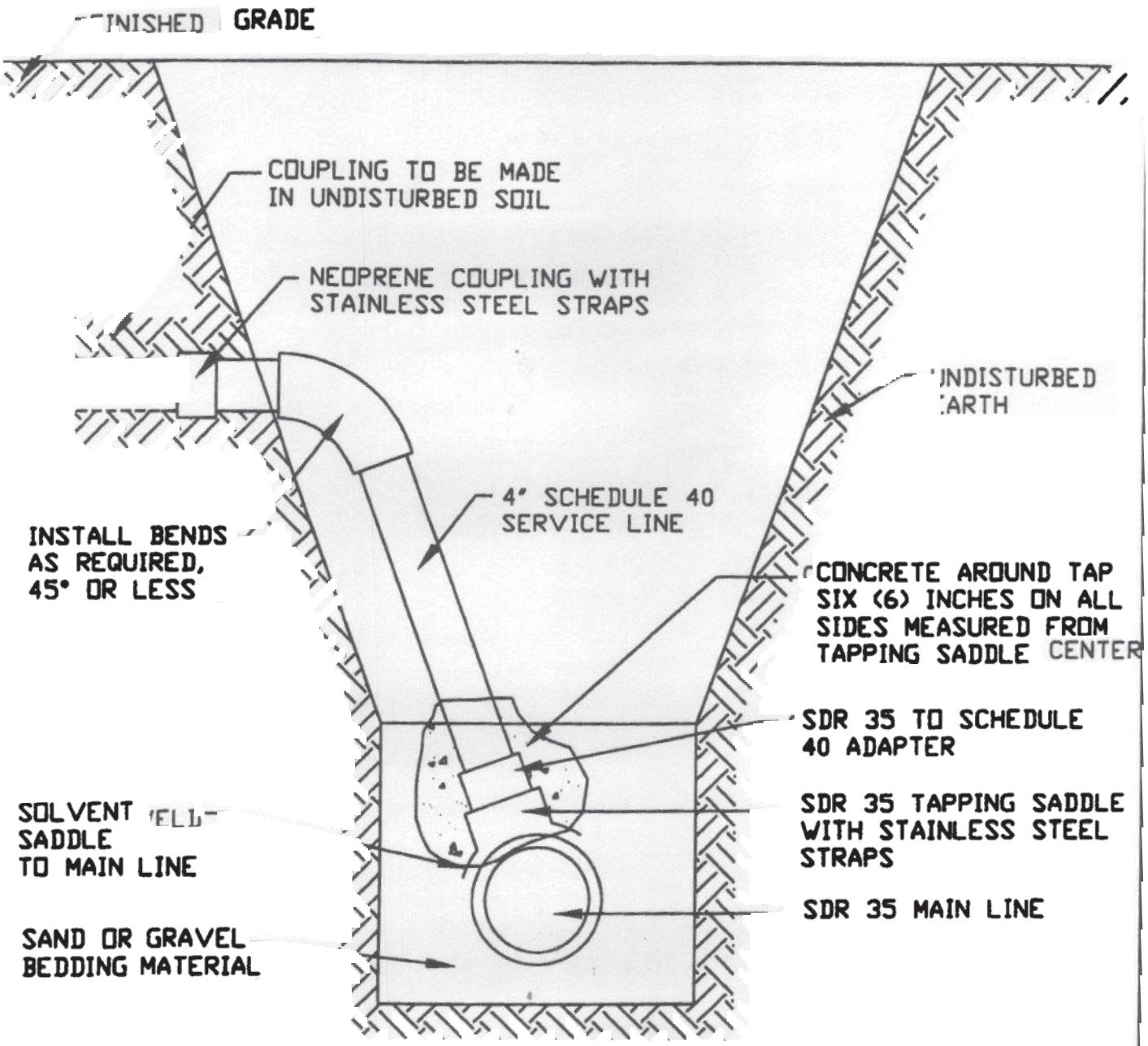

NOTES:

1. PVC SHOWN, HOWEVER, CLAY TILE, CONCRETE, AND DUCTILE IRON SHALL BE TAPPED IN SAME MANNER WITH CHANGE OF TAPPING SADDLE AND EXPANDING POLYURETHANE IN PLACE OF SOLVENT WELDING.
2. ALL MAIN LINE HOLES TO BE SAWED OR DRILLED AND COUPON PRESENTED AT TIME OF INSPECTION.
3. TAPS SHALL BE LEFT UNCOVERED FOR ONE (1) FOOT ON EACH SIDE OF SADDLE UNTIL TAP IS INSPECTED.

SANITARY SEWER TAP DETAIL
(EXISTING SEWER)

CITY OF COWETA		STANDARD DRAWING: STD SS 02	
		LAST REVISION DATE:	
DRAWN BY:	CHECKED BY:	APPROVED:	DATE

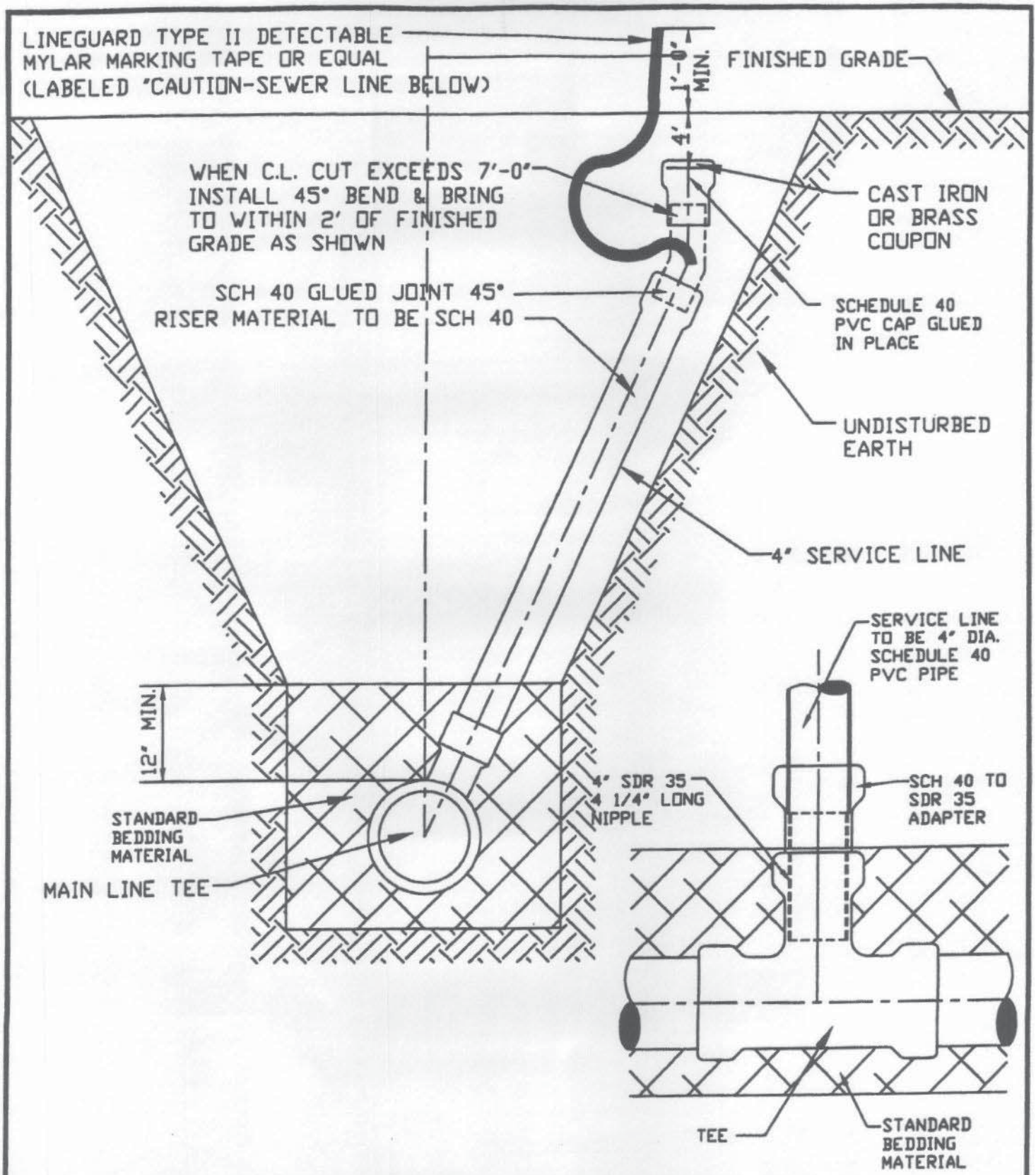

SANITARY SEWER RISER DETAIL

(NORMAL TRENCH)

CITY OF COWETA		STANDARD DRAWING: STD SS 03	
		LAST REVISION DATE:	
DRAWN BY:	CHECKED BY:	APPROVED:	DATE:

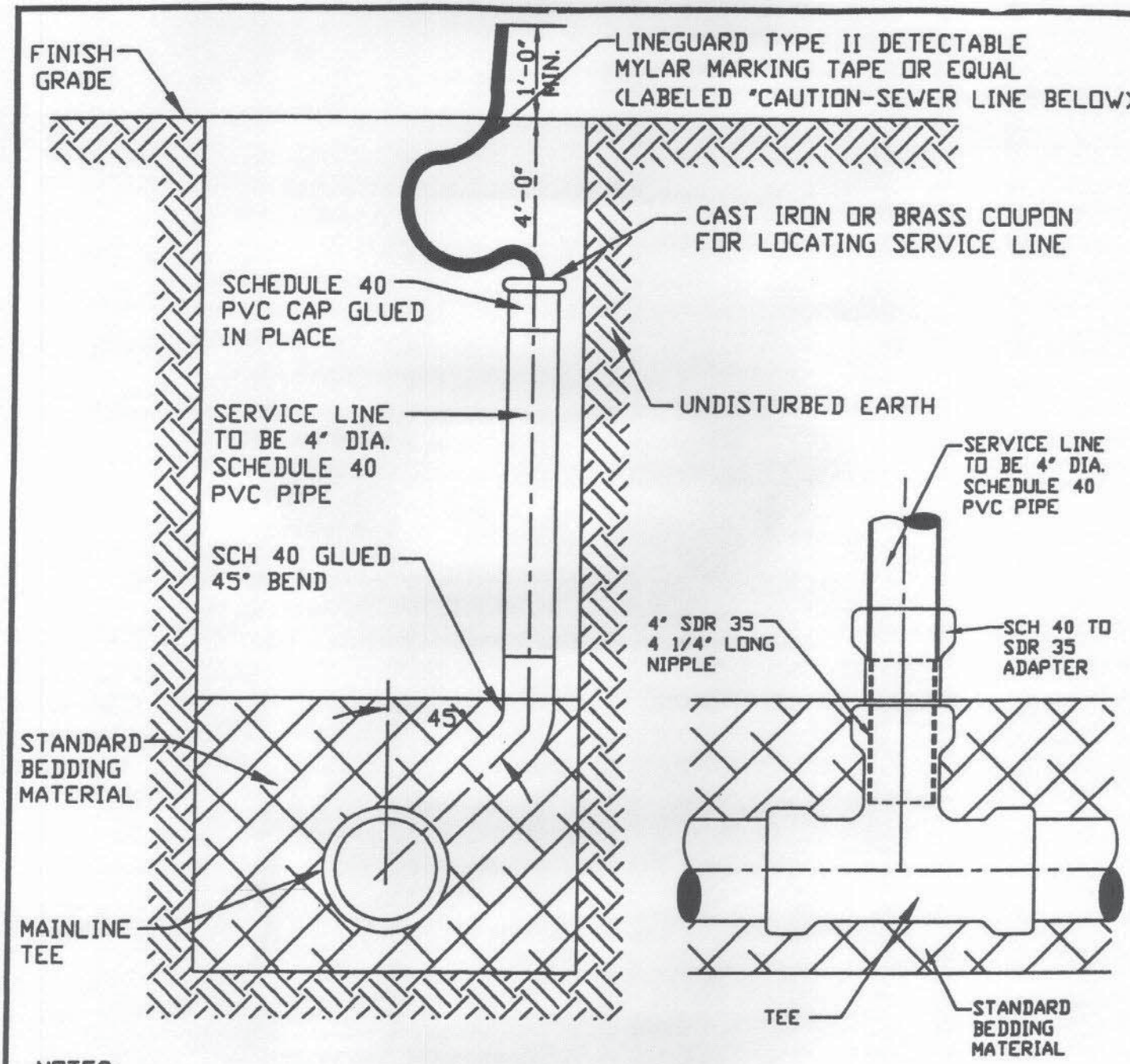

NOTES:

1. ALL NEW SANITARY SEWER LINES SHALL HAVE TAPS INSTALLED AS SHOWN ON THIS DETAIL FOR LINES UP TO 12 FEET DEEP. OVER 12 FEET DEEP STANDARD DRAWINGS SS 04 AND SS 05 WILL BE USED.
2. THE TAP SHALL BE LOCATED AT THE FIRST JOINT AT LEAST FIVE (5) FEET UPSTREAM FROM THE DOWNSTREAM PROPERTY LINE. THE EXACT LOCATION SHALL BE NOTED ON THE AS-BUILT PLANS AS A DISTANCE IN FEET FROM THE NEAREST MANHOLE.
3. FOR WIDE TRENCHES THE LAYOUT ON STANDARD DRAWING SS 04 WILL BE USED.

SANITARY SEWER TAP DETAIL
(NARROW TRENCH NEW CONSTRUCTION)

CITY OF COWETA	STANDARD DRAWING: STD SS 03A
	LAST REVISION DATE:

DRAWN BY:	CHECKED BY:	APPROVED:	DATE:

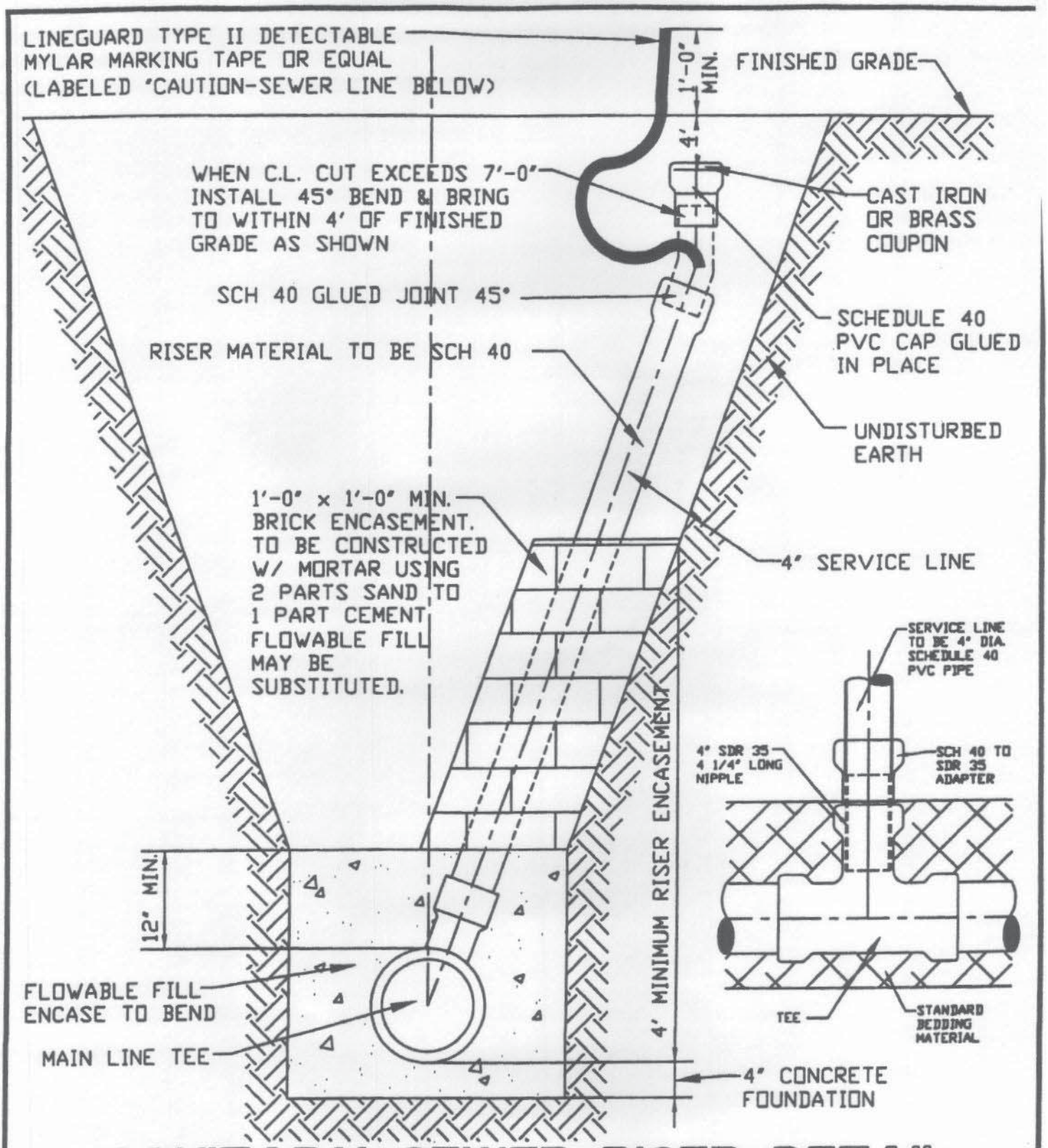

SANITARY SEWER RISER DETAIL OVER 12' DEEP (WIDE TRENCH)

CITY OF COWETA	STANDARD DRAWING: STD SS 04
	LAST REVISION DATE:

DRAWN BY:	CHECKED BY:	APPROVED:	DATE:

NOTE:
CONCRETE SHALL BE 3500 PSI
STANDARD MIX OR STRONGER

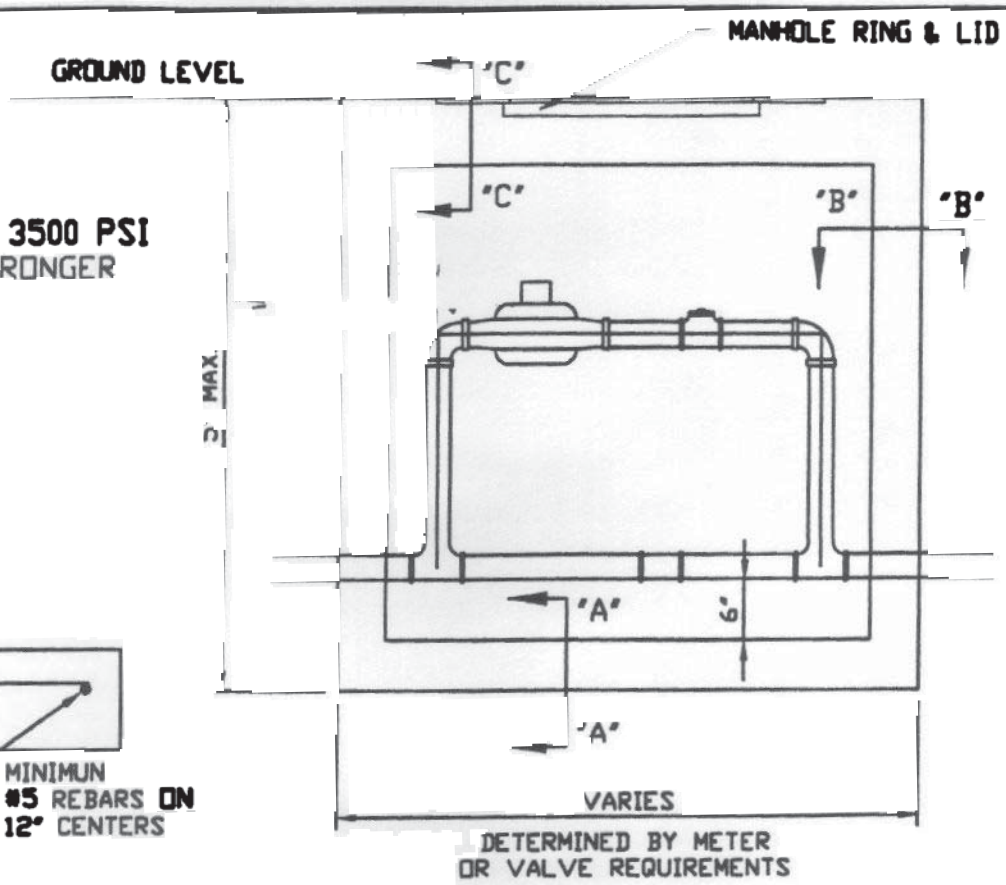

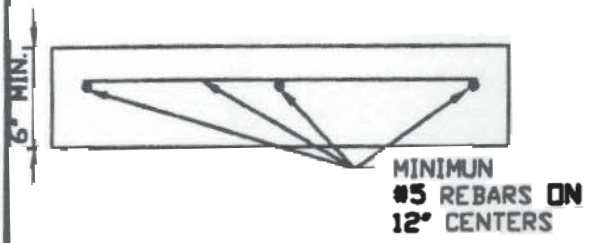

SECTION "A"-"A"

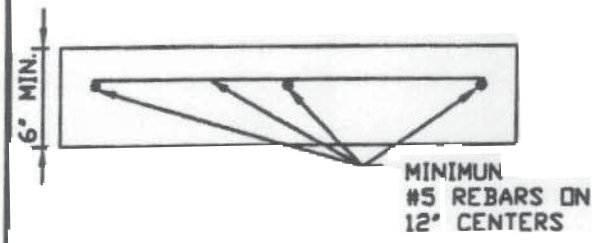

SECTION "B"-"B"

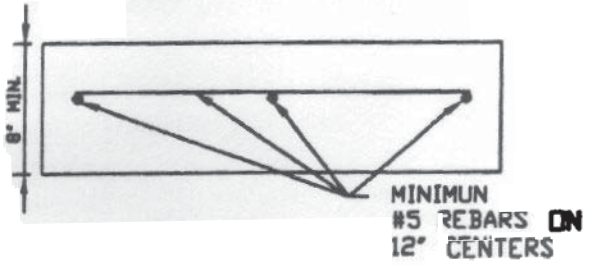

SECTION "C"-"C"

NOTE:

1. FOR VAULTS LESS THAN 3 FEET DEEP MASONARY UNITS MAY BE SUBSTITUTED FOR CAST IN PLACE CONCRETE.
2. PRECAST MANHOLE SECTIONS OR CULVERTS MAY BE USED IN PLACE OF CAST IN PLACE VAULTS IF SIZE REQUIREMENTS ARE MET.
3. FOR VAULTS OVER 5 FEET DEEP , PRECAST MANHOLE SECTIONS WITH STEPS SHALL BE USED TO PROVIDE ACCESS TO THE VAULT.
4. EXACT DIMENSIONS AND REQUIREMENTS FOR EACH VAULT SHALL BE ESTABLISHED BY THE DESIGN ENGINEER.
5. MANHOLE RING AND LID SHALL BE THE CITY STANDARD AS SHOWN ON STD. W 03.

METER OR VALVE VAULT DETAIL

CITY OF COWETA	STANDARD DRAWING: STD W 17
	LAST REVISION DATE:

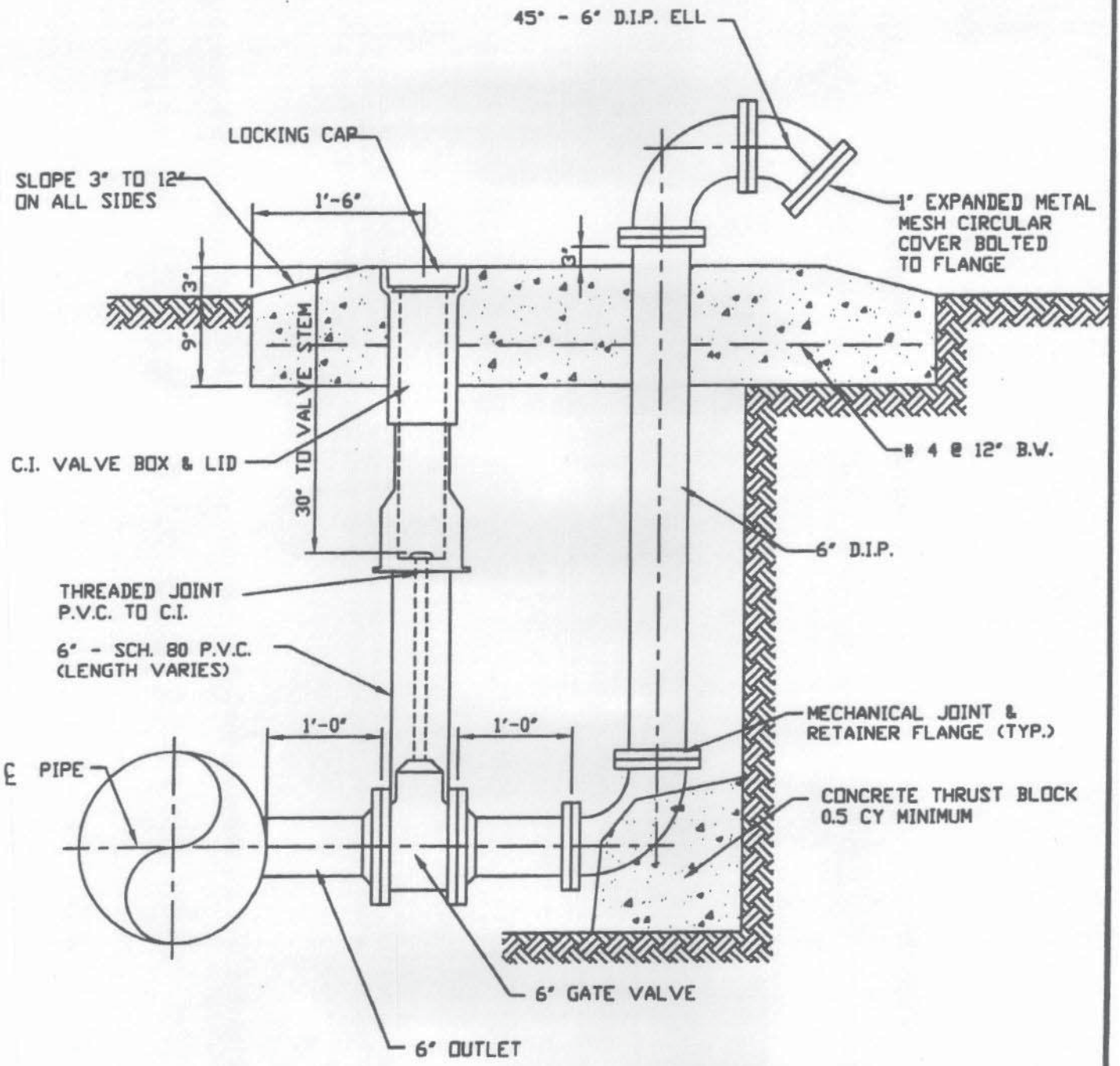

NOTES:
1. ALL EXPOSED METAL TO RECEIVE 2 COATS OF ALUMINUM INDUSTRIAL GRADE PAINT.
2. CONCRETE PAD TO BE 2' - 8" X 6' - 0" X 1'-0"

BLOW OFF VALVE ASSEMBLY DETAIL

CITY OF COWETA	STANDARD DRAWING: STD W 18
	LAST REVISION DATE:

DRAWN BY:	CHECKED BY:	APPROVED: CEA	DATE:

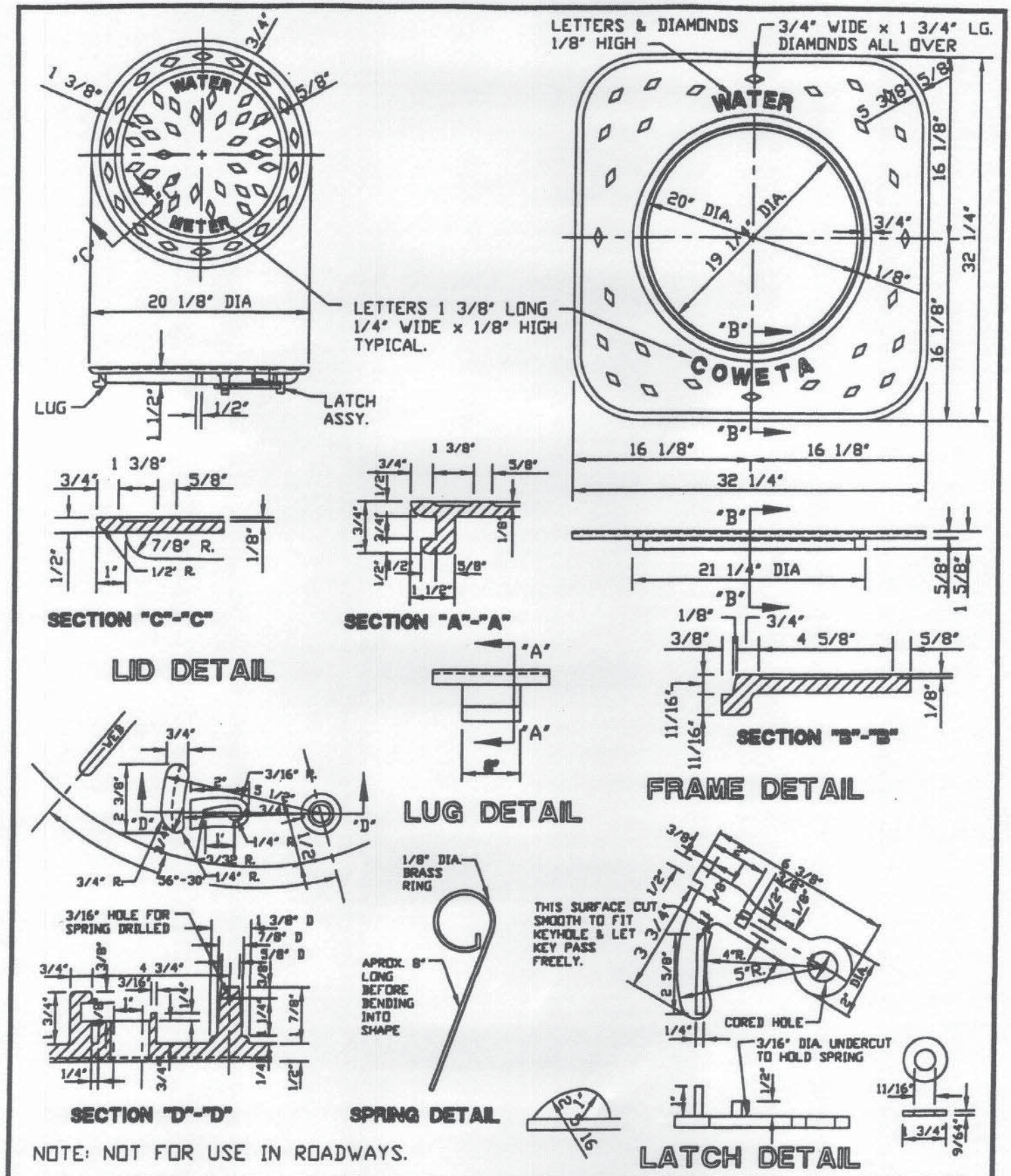

NOTE: NOT FOR USE IN ROADWAYS.

VALVE VAULT FRAME AND LID DETAIL

CITY OF COWETA	STANDARD DRAWING: STD W 19
	LAST REVISION DATE:

DRAWN BY:	CHECKED BY:	APPROVED:	DATE:

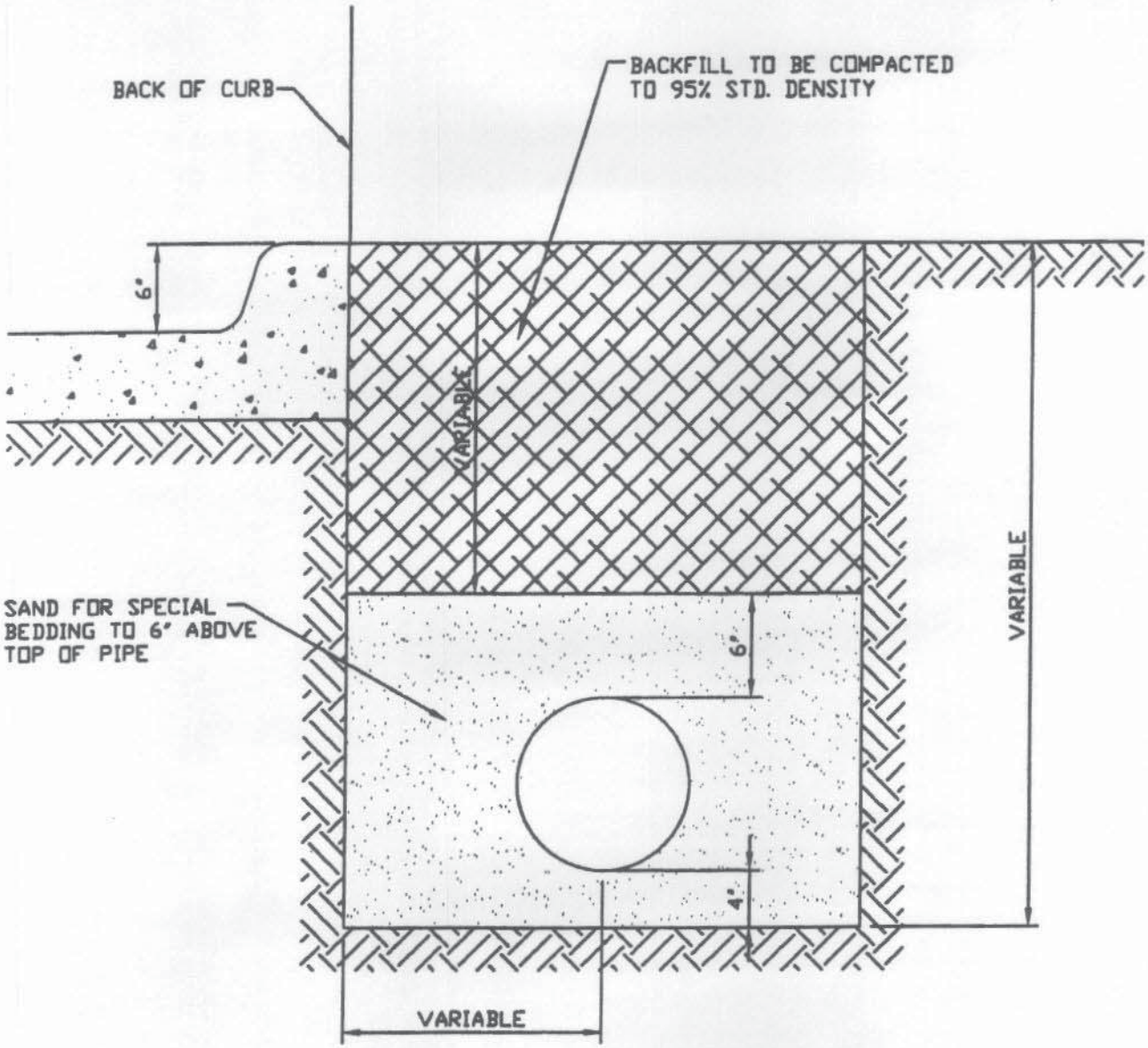

TRENCH ADJACENT TO ROADWAY

CITY OF COWETA		STANDARD DRAWING: STD W 20	
		LAST REVISION DATE:	
DRAWN BY:	CHECKED BY:	APPROVED:	DATE:

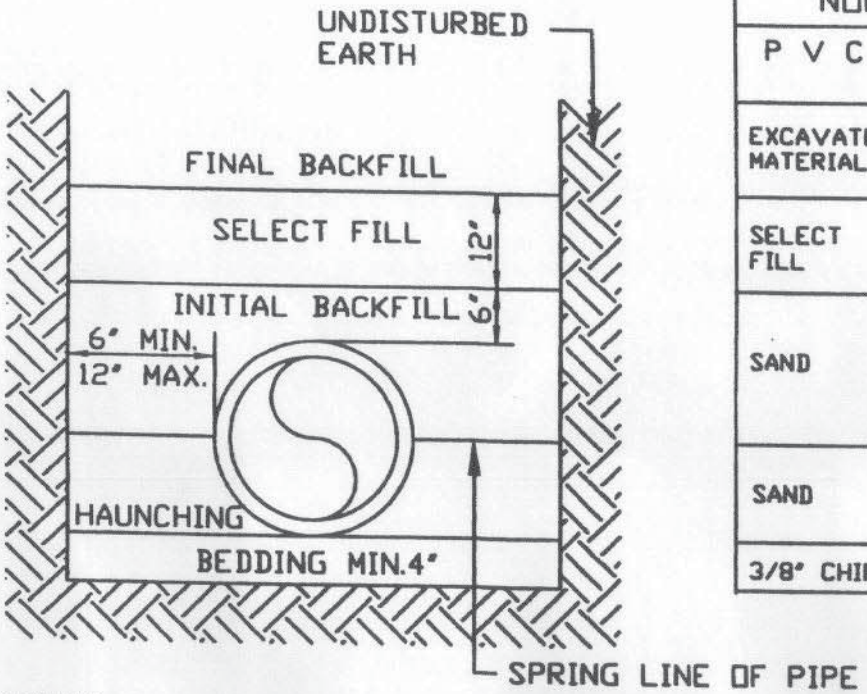

NON-PAVED AREAS		
P V C	DUCTILE IRON	CONCRETE
EXCAVATED MATERIAL	EXCAVATED MATERIAL	EXCAVATED MATERIAL
SELECT FILL	SELECT FILL	SELECT FILL
SAND	SAND	SAND
SAND	SAND	SAND
3/8" CHIPS	3/8" CHIPS	3/8" CHIPS

PAVED AREAS		
P V C	DUCTILE IRON	CONCRETE
CRUSHED ROCK	CRUSHED ROCK	CRUSHED ROCK
CRUSHED ROCK	CRUSHED ROCK	CRUSHED ROCK
CRUSHED ROCK	CRUSHED ROCK	CRUSHED ROCK
SAND	SAND	SAND
3/8" CHIPS	3/8" CHIPS	3/8" CHIPS

NOTES:

1. SELECT FILL CONSISTS OF EXCAVATED MATERIALS CONTAINING NO ROCKS LARGER THAN 2 INCHES.
2. CRUSHED ROCK SHALL BE ODOT TYPE A ROCK.
3. BEDDING REQUIRED FOR ALL SANITARY SEWER REPLACEMENT PROJECTS IN ROCK EXCAVATION AND FOR LEVELING TRENCH IN NEW INSTALLATION.
4. COMPACTION REQUIREMENTS:
   a. NON-PAVED AREAS: 90% MAXIMUM STANDARD PROCTOR DENSITY FOR COHESIONLESS SOILS AND 85% FOR COHESIVE SOILS.
   b. PAVED AREAS: 95% MAXIMUM STANDARD PROCTOR DENSITY FOR COHESIONLESS SOILS.
5. FILLS OVER 10 FEET DEEP - MATERIAL IN THE AREA FROM SELECT FILL TO BEDDING SHALL BE 3/4" CRUSHER RUN, WELL GRADED.
6. FLOWABLE FILL MAY BE SUBSTITUTED FOR ALL MATERIALS IN ROAD CROSSING.
7. PROVIDE AND INSTALL APPROPRIATE TRACER WIRE IF PVC PIPE AND LOCATOR TAPE.

SANITARY SEWER PIPE BEDDING DETAIL

CITY OF COWETA	STANDARD DRAWING: STD SS 01		
	LAST REVISION DATE:		
DRAWN BY:	CHECKED BY:	APPROVED:	DATE:

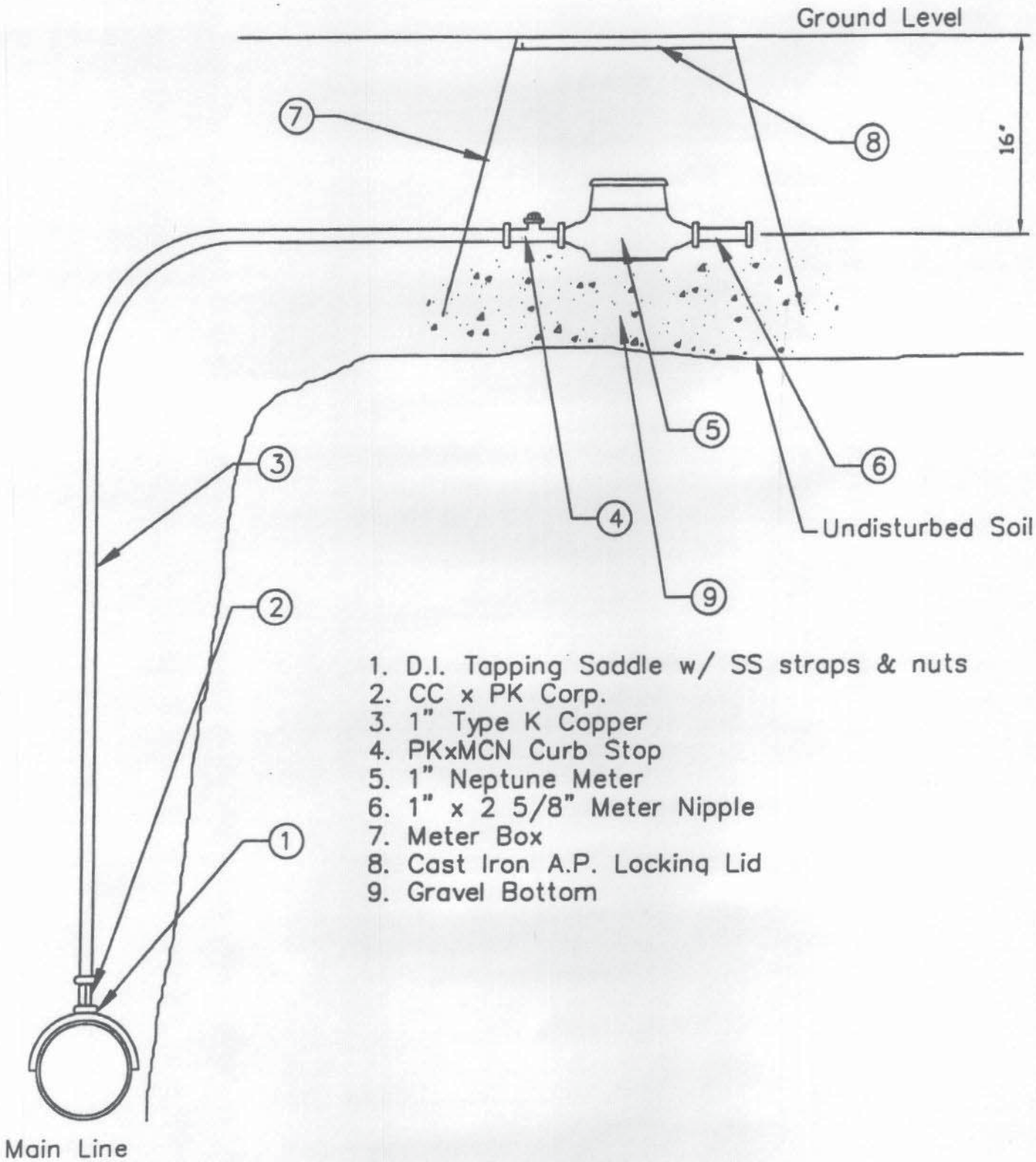

1. D.I. Tapping Saddle w/ SS straps & nuts
2. CC x PK Corp.
3. 1" Type K Copper
4. PKxMCN Curb Stop
5. 1" Neptune Meter
6. 1" x 2 5/8" Meter Nipple
7. Meter Box
8. Cast Iron A.P. Locking Lid
9. Gravel Bottom

1" METER SETTING

CITY OF COWETA	STANDARD DRAWING: STD W 12
	LAST REVISION DATE:

DRAWN BY: | CHECKED BY: | APPROVED BY: | DATE:

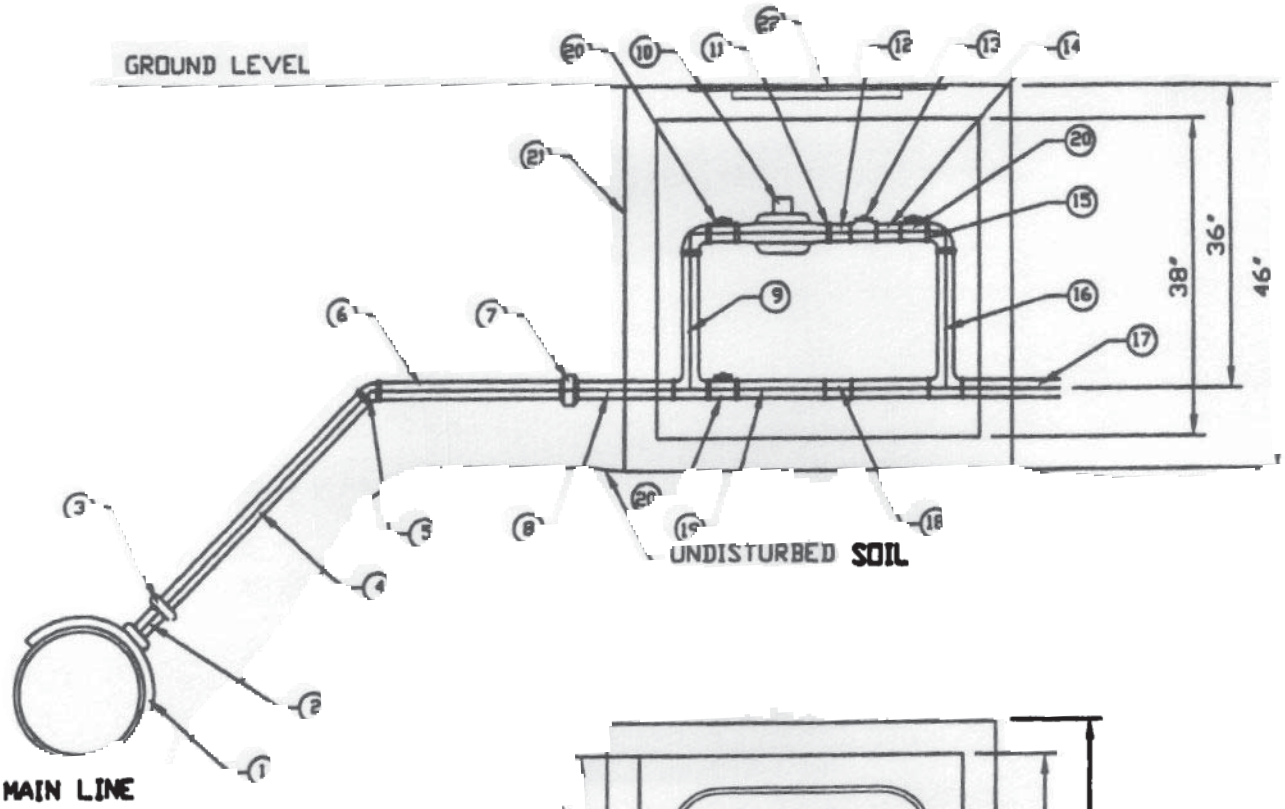

THE TAP IS TO BE MADE AT A 45° ANGLE

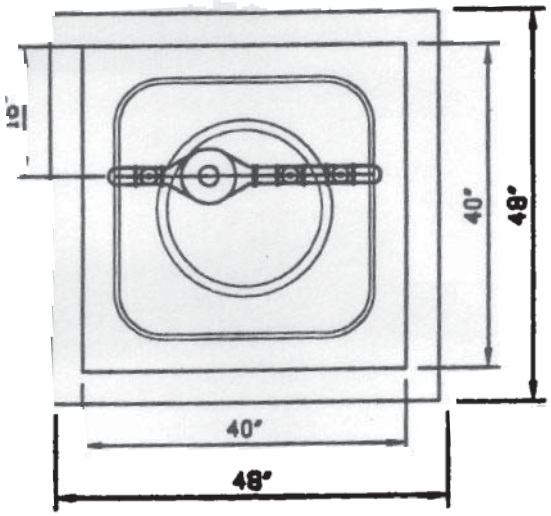

1. C.I. TAPPING SADDLE W/ SS STRAPS & NUTS
2. CORP
3. BRASS COLLAR
4. BRASS PIPE
5. BRASS 45° BEND
6. BRASS PIPE
7. BRASS UNION
8. 12" BRASS NIPPLE
9. INLET HALF OF RISER
10. POSITIVE DISPLACEMENT METER (NEPTUNE)
11. FLANGE BRASS
12. 3" BRASS NIPPLE
13. BRASS TEE W/ PLUG
14. CLOSE NIPPLE BRASS
15. FLANGE BRASS
16. OUTLET HALF OF RISER
17. 12" BRASS NIPPLE
18. 1 1/4" SOLDER X SOLDER COLLAR
19. 1 1/4" COPPER TUBING
20. LOCKING BALL VALVE
21. VAULT
22. VAULT RING & LID

1 1/2" POSITIVE DISPLACEMENT METER SETTING

CITY OF COWETA

STANDARD DRAWING: STD W 13

LAST REVISION DATE

DRAWN BY: CHECKED BY:

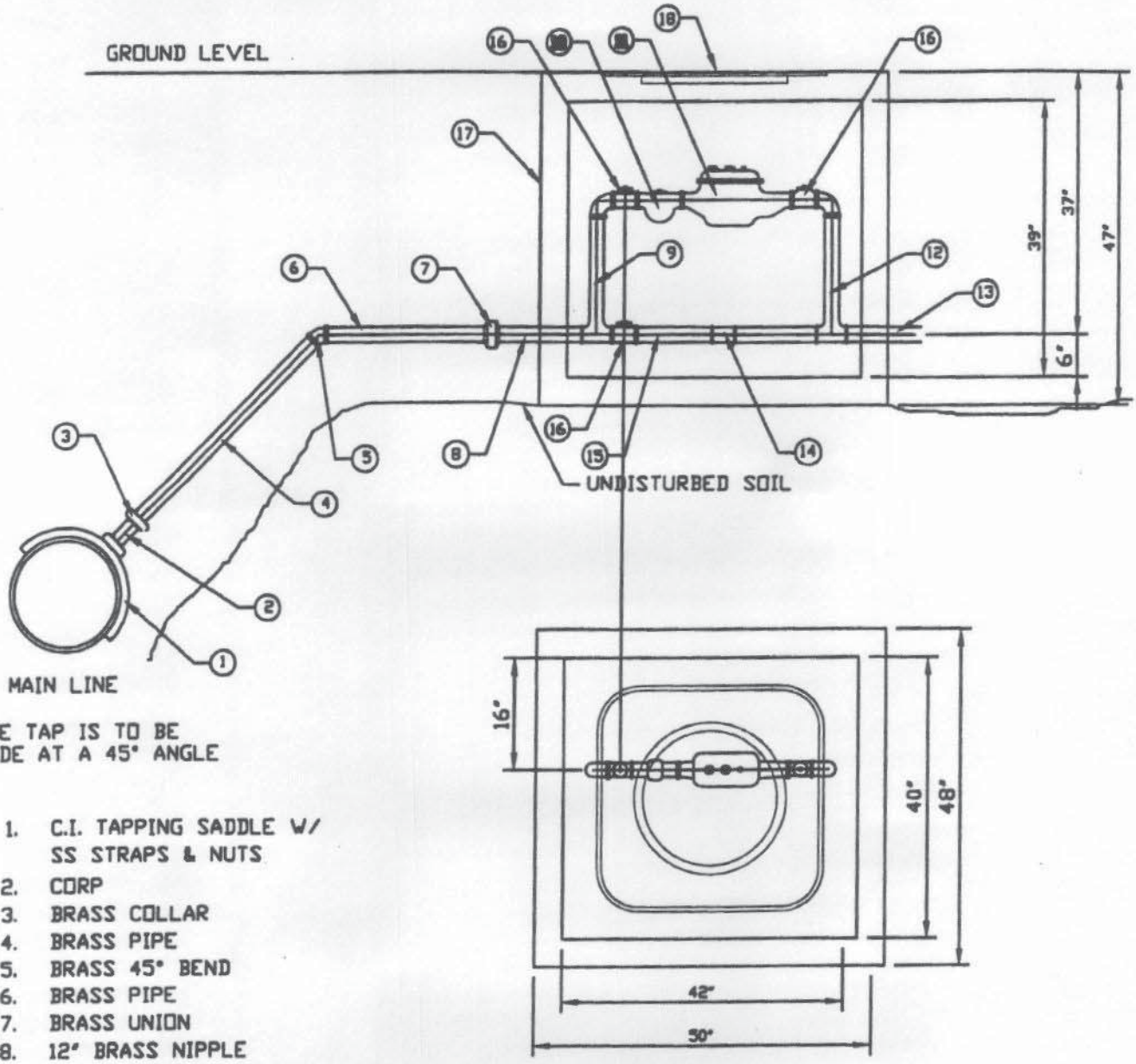

THE TAP IS TO BE MADE AT A 45° ANGLE

1. C.I. TAPPING SADDLE W/ SS STRAPS & NUTS
2. CORP
3. BRASS COLLAR
4. BRASS PIPE
5. BRASS 45° BEND
6. BRASS PIPE
7. BRASS UNION
8. 12" BRASS NIPPLE
9. INLET HALF OF RISER
10. 2" STRAINER (NEPTUNE)
11. 2" COMPOUND METER (NEPTUNE)
12. OUTLET HALF OF RISER
13. 12" BRASS NIPPLE
14. 1 1/4" SOLDER X SOLDER COLLAR
15. 1 1/4" COPPER TUBING
16. LOCKING BALL VALVE
17. VAULT
18. VAULT RING & LID

2" COMPOUND METER SETTING

CITY OF COWETA	STANDARD DRAWING: STD W 14
	LAST REVISION DATE:

DRAWN BY:	CHECKED BY:	APPROVED:	DATE:

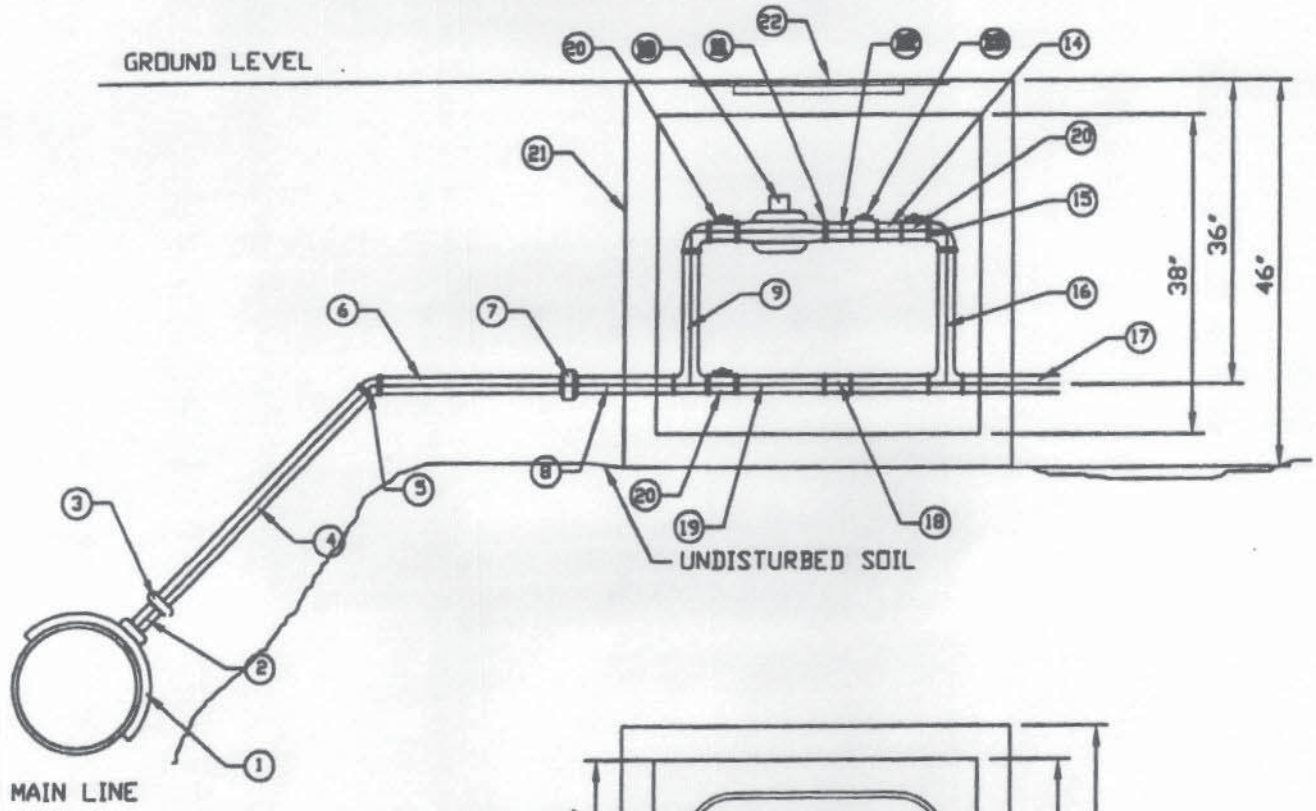

THE TAP IS TO BE MADE AT A 45° ANGLE

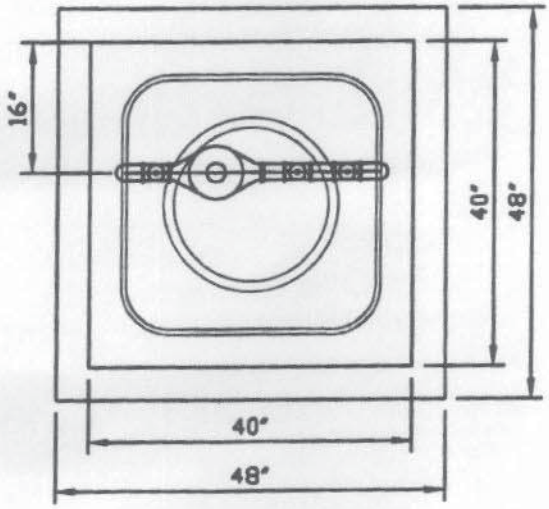

1. C.I. TAPPING SADDLE W/ SS STRAPS & NUTS
2. CORP
3. BRASS COLLAR
4. BRASS PIPE
5. BRASS 45° BEND
6. BRASS PIPE
7. BRASS UNION
8. 12" BRASS NIPPLE
9. INLET HALF OF RISER
10. POSITIVE DISPLACEMENT METER (NEPTUNE)
11. FLANGE BRASS
12. 3" BRASS NIPPLE
13. BRASS TEE W/ PLUG
14. CLOSE NIPPLE BRASS
15. FLANGE BRASS
16. OUTLET HALF OF RISER
17. 12" BRASS NIPPLE
18. 1 1/4" SOLDER X SOLDER COLLAR
19. 1 1/4" COPPER TUBING
20. LOCKING BALL VALVE
21. VAULT
22. VAULT RING & LID

2" POSITIVE DISPLACEMENT METER SETTING

CITY OF COWETA	STANDARD DRAWING: STD W 15
	LAST REVISION DATE:

DRAWN BY:	CHECKED BY:	APPROVED:	DATE:

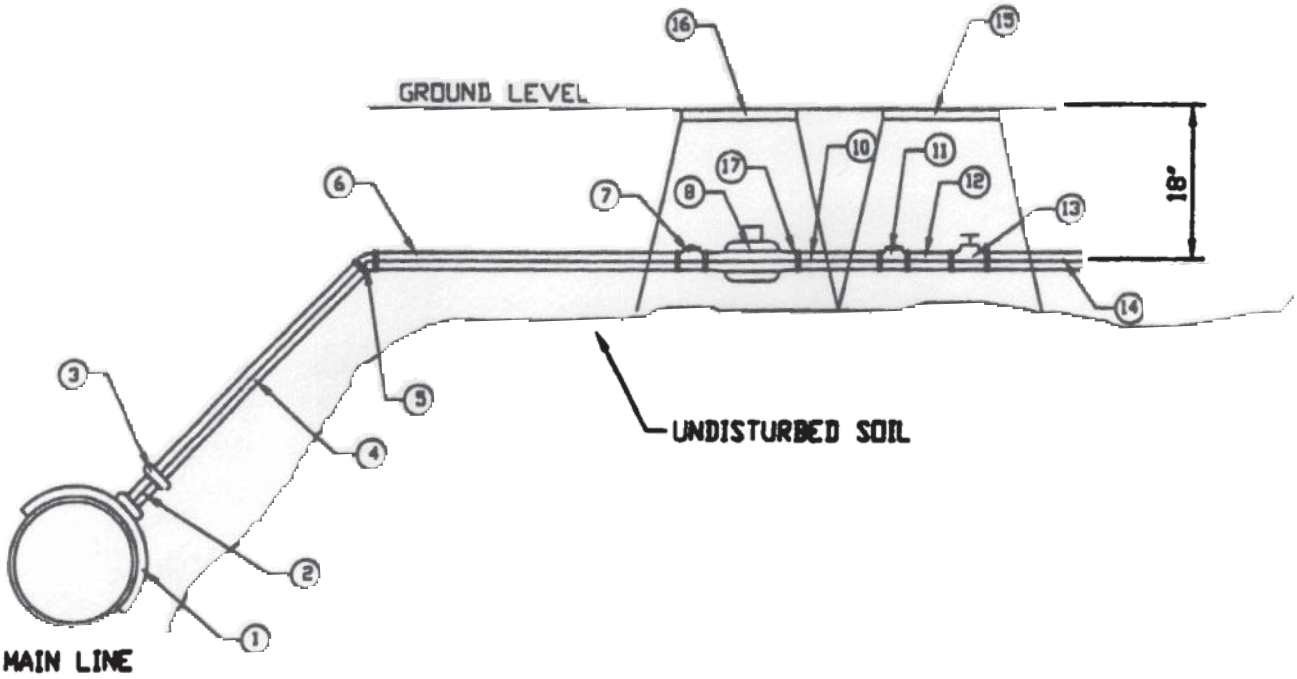

THE TAP IS TO BE
MADE AT A 45° ANGLE

1. C.I. TAPPING SADDLE W/ SS STRAPS & NUTS
2. CORP
3. BRASS COLLAR
4. BRASS PIPE
5. BRASS 45° BEND
6. BRASS PIPE
7. FIP X FLANGE BALL VALVE
8. TURBINE METER (NEPTUNE)
9. FLANGE
10. 6" BRASS NIPPLE
11. BRASS TEE W/ PLUG
12. CLOSE NIPPLE BRASS
13. GATE VALVE
14. 12" BRASS NIPPLE
15. METER BOX W/ CAST IRON A.P. LOCKING LID
16. METER BOX /W CAST IRON A.P. LOCKING LID

1 1/2" 2" TURBINE METER SETTING

CITY OF COWETA	STANDARD DRAWING: STD W 16
	LAST REVISION DATE:

DRAWN BY: CHECKED BY:

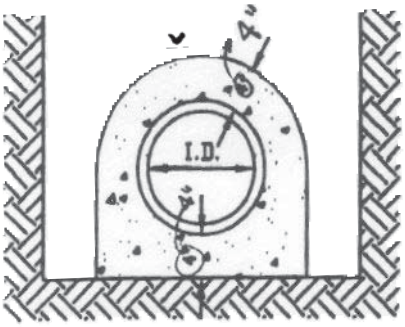

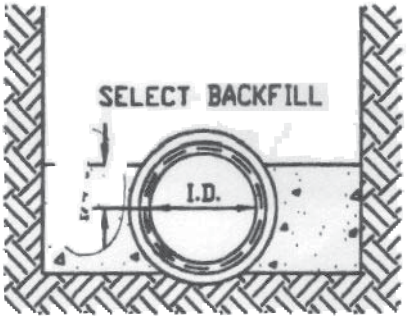

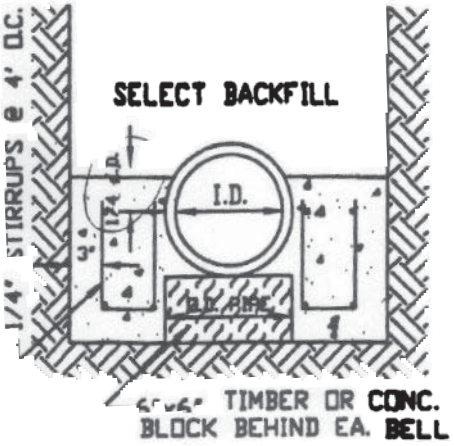

CONCRETE ENCASEMENT
CONCRETE PER LF

8" I.D.	DIP, RCP	1.41 CF
10" I.D.	DIP, RCP	1.67 CF
12" I.D.	DIP, RCP	1.93 CF
15" I.D.	DIP, RCP	2.36 CF
18" I.D.	DIP, RCP	2.81 CF
21" I.D.	DIP, RCP	3.27 CF
24" I.D.	DIP, RCP	3.76 CF
27" I.D.	DIP, RCP	4.26 CF
30" I.D.	DIP	4.78 CF
30" I.D.	RCP	5.09 CF
36" I.D.	DIP	5.80 CF
36" I.D.	RCP	6.20 CF

CONCRETE CRADLE
CONCRETE PER LF

8" I.D.	DIP, RCP	1.09 CF
10" I.D.	DIP, RCP	1.23 CF
12" I.D.	DIP, RCP	1.33 CF
15" I.D.	DIP, RCP	1.66 CF
18" I.D.	DIP, RCP	2.00 CF
21" I.D.	DIP, RCP	1.96 CF
24" I.D.	DIP, RCP	2.69 CF
27" I.D.	DIP, RCP	3.52 CF
30" I.D.	DIP	3.38 CF
30" I.D.	RCP	4.40 CF
36" I.D.	DIP	4.12 CF
36" I.D.	RCP	5.26 CF

WATER TABLE CRADLE
CONCRETE PER LF

8" I.D.	DIP, RCP	2.34 CF
10" I.D.	DIP, RCP	2.48 CF
12" I.D.	DIP, RCP	2.58 CF
15" I.D.	DIP, RCP	3.04 CF
18" I.D.	DIP, RCP	3.50 CF
21" I.D.	DIP, RCP	3.46 CF
24" I.D.	DIP, RCP	4.44 CF
27" I.D.	DIP, RCP	5.52 CF
30" I.D.	DIP	5.38 CF
30" I.D.	RCP	6.65 CF
36" I.D.	DIP	6.37 CF
36" I.D.	RCP	7.76 CF

CONCRETE ENCASEMENT & CRADLES

NOTES:
1. ALL SUB-GRADES ACCU-HAND

2.

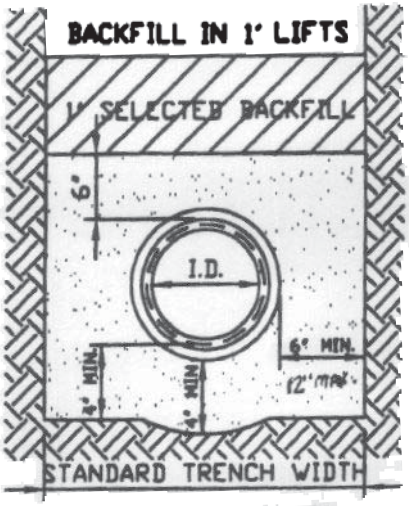

CROSS SECTION

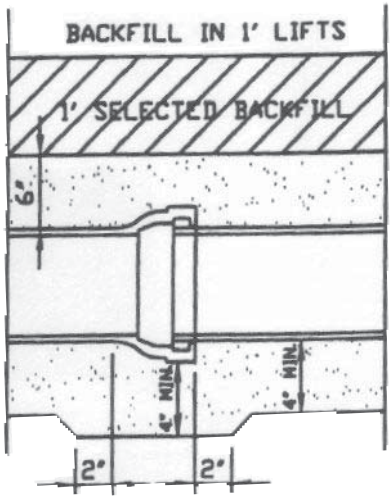

LONGITUDINAL SECTION

TRENCH CONDITIONS

CITY OF COWETA

STANDARD DRAWING: STD W 07

LAST REVISION DATE

DRAWN BY:

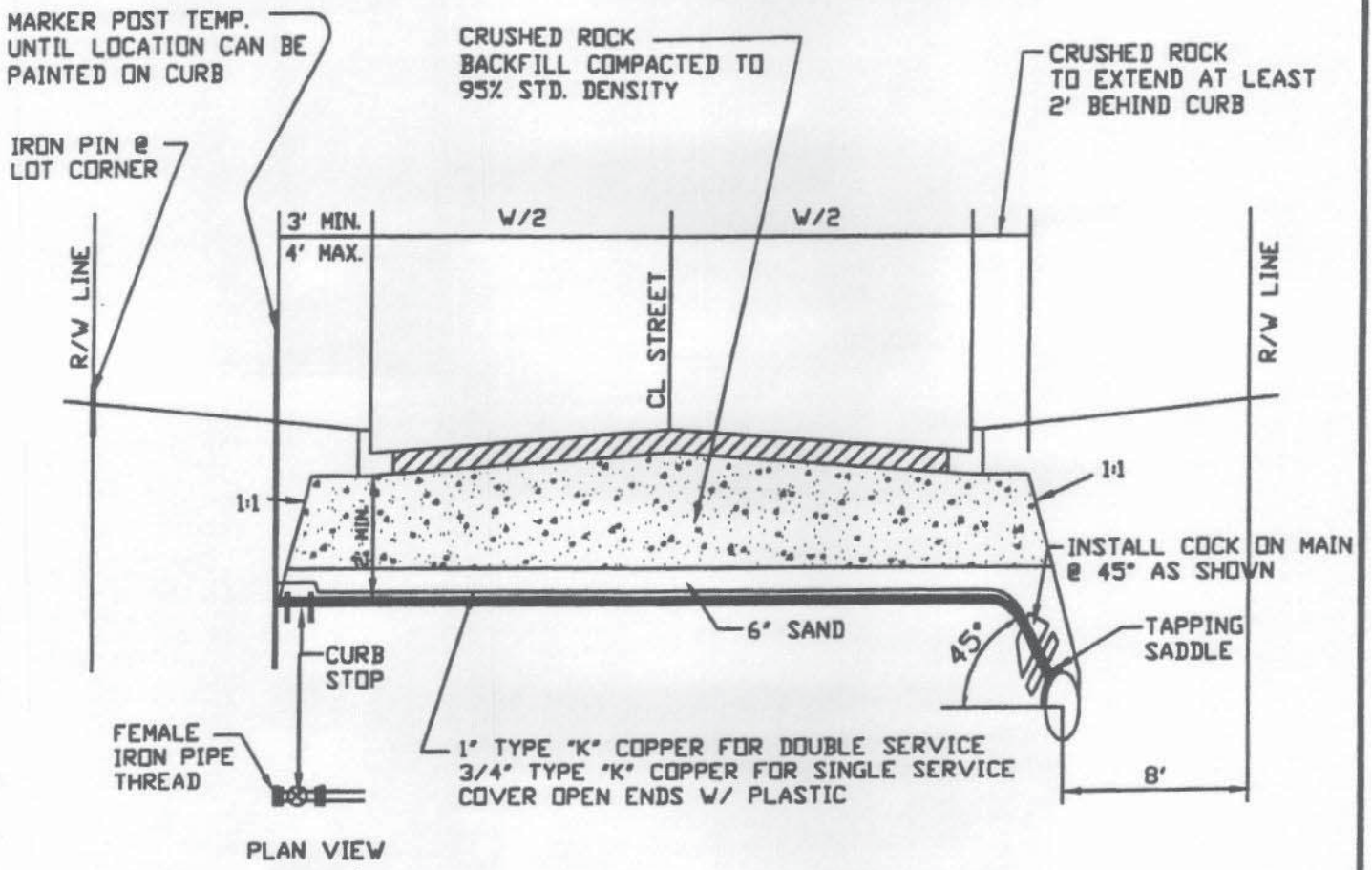

NOTES:

1. LOT CORNERS SHALL BE STAKED PRIOR TO CONSTRUCTION OF SERVICE LINES, CROSSING TO BE ON LOT LINE.
2. DETECTABLE MYLAR MARKING TAPE (LIFEGUARD TYPE II OR EQUAL) TO BE INSTALLED OVER COPPER SERVICE AS SHOWN.
3. CROSSING NOT REQUIRED IN LOOPED CUL-DE-SAC.
4. COPPER SHALL NOT BE SPLICED.
5. CROSSING TO BE INSPECTED BEFORE TRENCH IS BACKFILLED.
6. IF ROCK IS USED IN BACKFILL, COPPER SHALL BE PLACED IN SCHEDULE 40 PVC SLEEVE

WATER LINE STREET CROSSING DETAIL

CITY OF COWETA	STANDARD DRAWING: STD W 08
	LAST REVISION DATE:

DRAWN BY:	CHECKED BY:	APPROVED:	DATE:

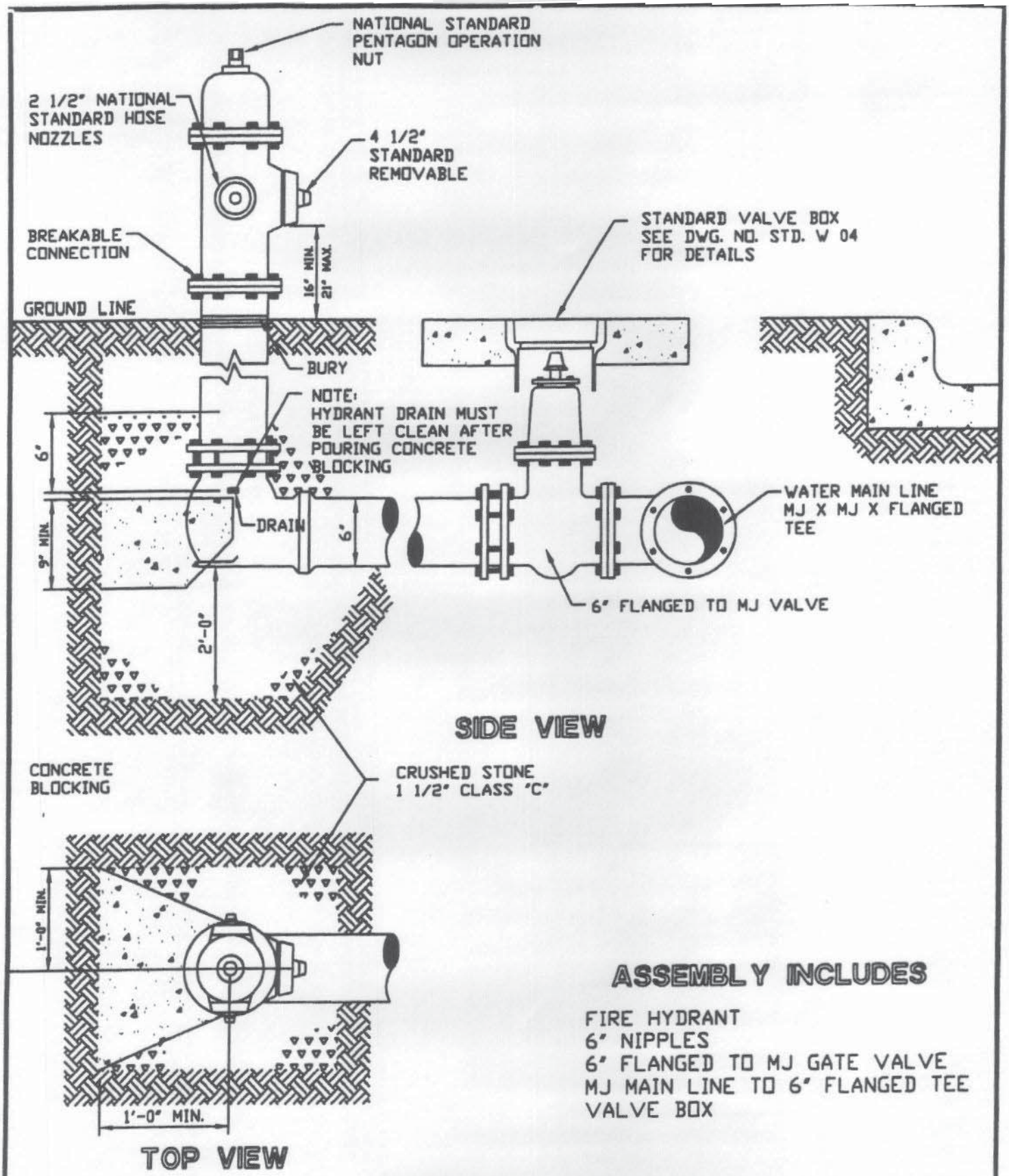

ASSEMBLY INCLUDES

FIRE HYDRANT
6" NIPPLES
6" FLANGED TO MJ GATE VALVE
MJ MAIN LINE TO 6" FLANGED TEE
VALVE BOX

FIRE HYDRANT ASSEMBLY DETAIL

CITY OF COWETA	STANDARD DRAWING: STD W 09
	LAST REVISION DATE:

DRAWN BY:	CHECKED BY:	APPROVED:	DATE:

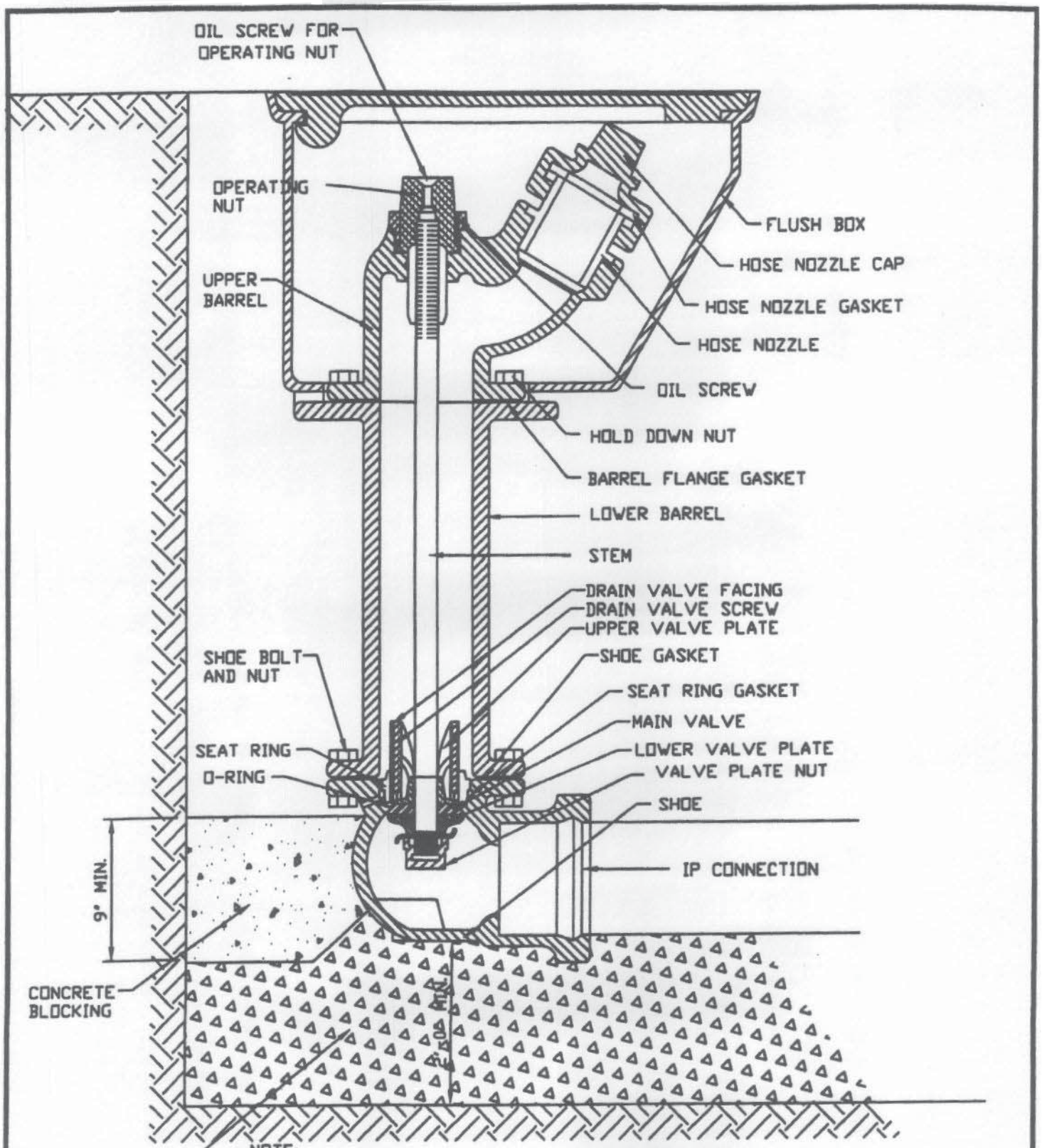

NOTE:
PAYMENT OF BLOW OFF HYDRANT ASSEMBLY SHALL INCLUDE EXCAVATION, BACKFILL, BLOW OFF HYDRANT, FLUSH BOX, NIPPLE, FITTINGS, CONCRETE BLOCKING, AND CRUSHED STONE BASE.

BLOW OFF HYDRANT DETAIL

CITY OF COWETA	STANDARD DRAWING: STD W 10
	LAST REVISION DATE:

DRAWN BY:	CHECKED BY:	APPROVED: CEA	DATE:

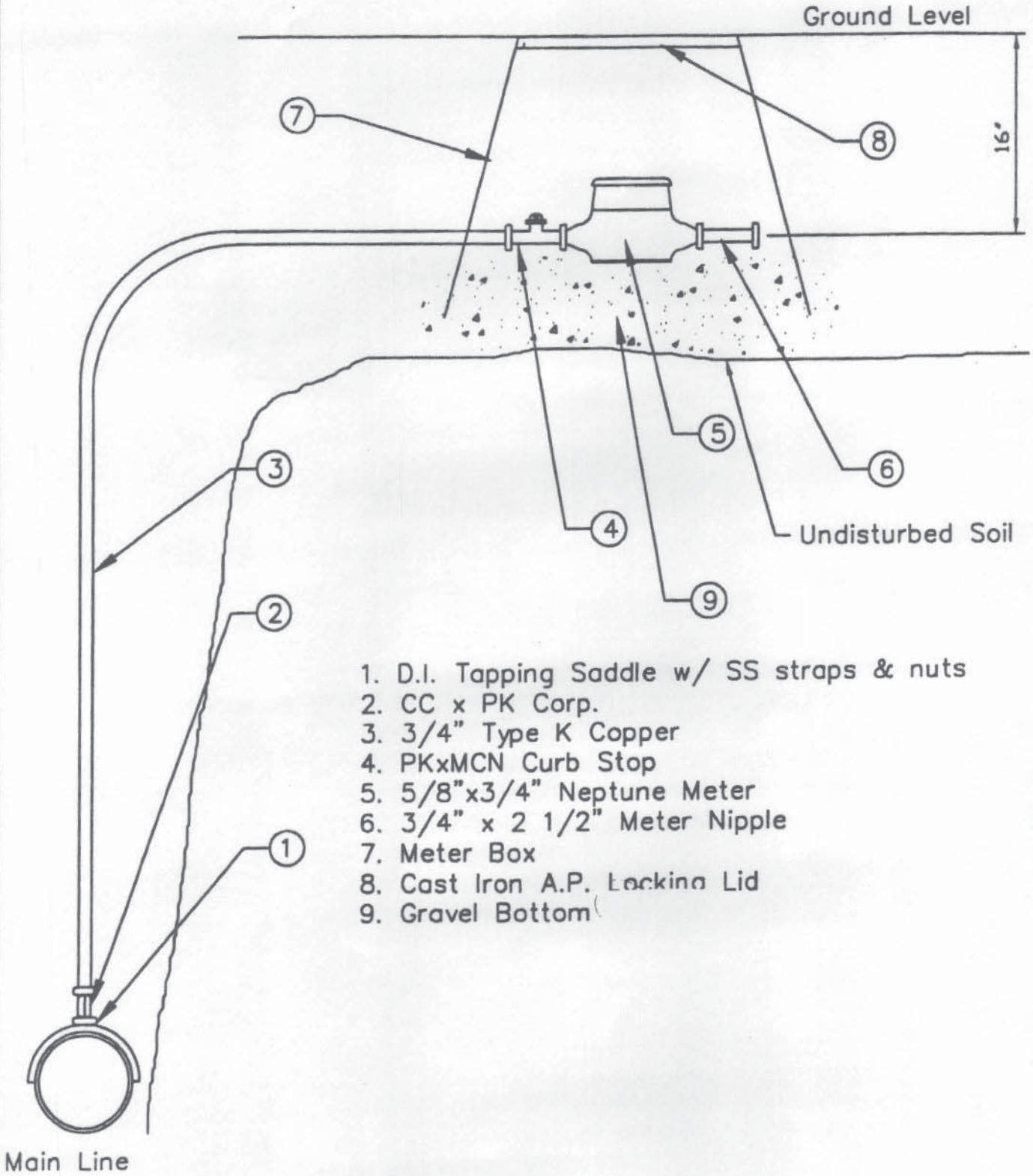

3/4" METER SETTING

CITY OF COWETA	STANDARD DRAWING: STD W 11
	LAST REVISION DATE:

DRAWN BY:	CHECKED BY:	APPROVED:	DATE:

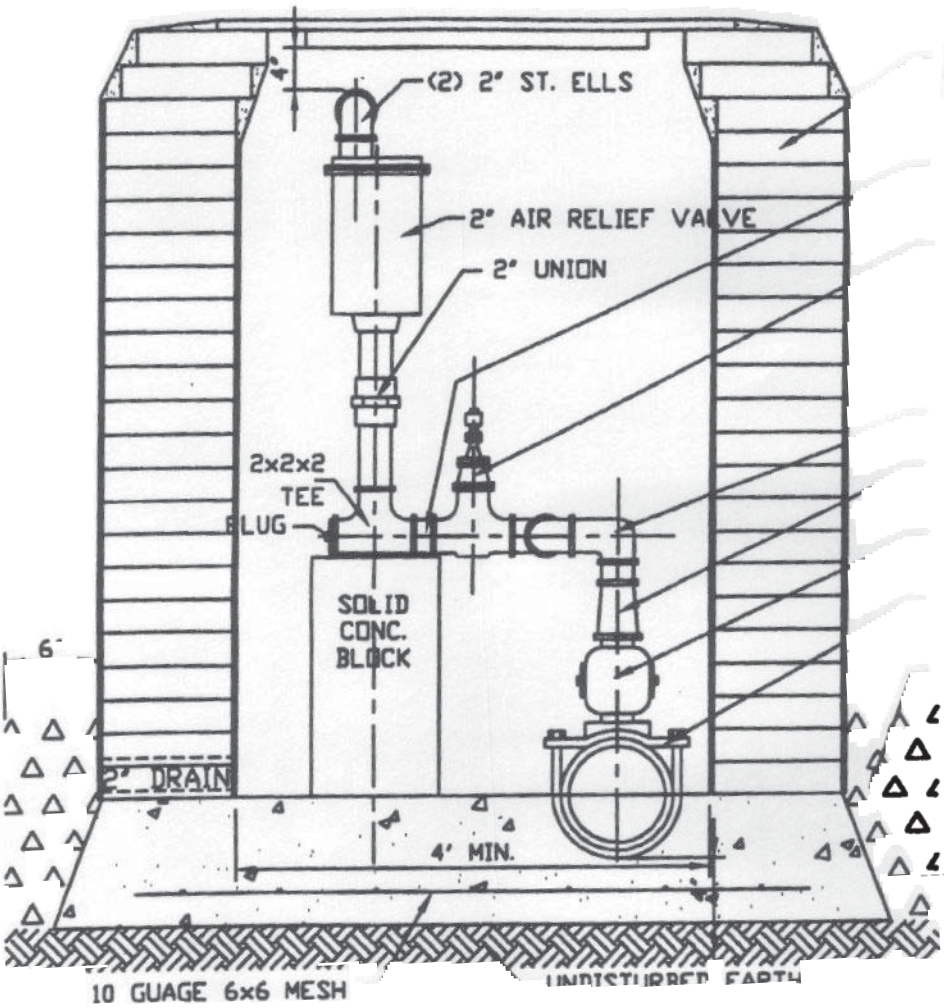

ROUND OR SQUARE, MASONARY OR PRECAST MANHOLE SECTION

2" x 2" ALL THREAD NIPPLE

2" VALVE, SCREW END, NON-RISING STEM, IRON BODY, BRONZE MOUNTED, DOUBLE DISC. 175 LBS. O.P. WITH SQ. OPERATING NUT

(3) 2" ST. ELLS

2 1/2" O.D. x 2"O.D. REDUCER

2" CORP. STOP

TAPPING SADDLE REQUIRED ON ALL WATER LINES

CRUSHED STONE 1 1/2"

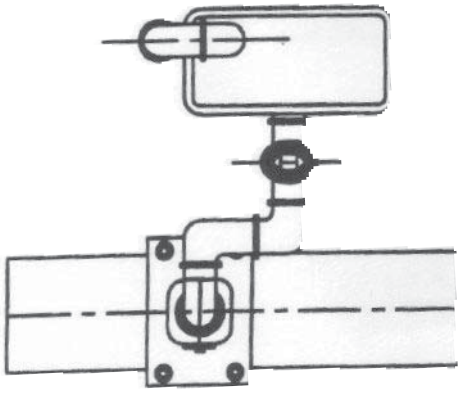

TOP VIEW

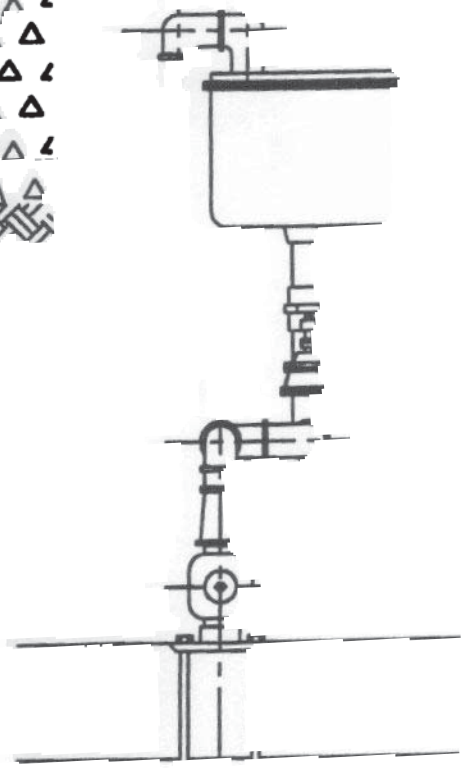

SIDE VIEW

NOTES:
1. ALL PIPING AND CONNECTORS SHALL BE BRONZE, EXCEPT TAPPING SADDLE.
2. STAINLESS STEEL BOLTS WILL BE USED ON TAPPING SADDLES.
3. FRAME AND LID FOR VAULT SHALL BE AS SHOWN ON STANDARD DRAWING W 03.

AIR RELIEF VALVE AND VAULT DETAIL

CITY OF COWETA

STANDARD DRAWING: STD W 02

LAST REVISION DATE:

DRAWN BY:

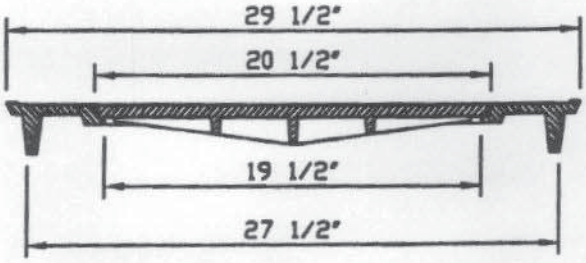

1. METER RING IS CAST WITH SIX BOLT/RIVIT HOLES THROUGH THE SKIRT FOR ATTACHMENT TO 28" DIAMETER CORRUGATED STEEL METER CAN. SPECIFY CAN HEIGHT WHEN ORDERING.
2. METER LID TO HAVE KEYED LOCKING MECHANISM.

	WEIGHT
LID	46 LBS
RING	61 LBS
SET	107 LBS

WATER VALVE VAULT FRAME AND LID DETAIL

CITY OF COWETA	STANDARD DRAWING: STD W 03
	LAST REVISION DATE:

DRAWN BY: CHECKED BY:

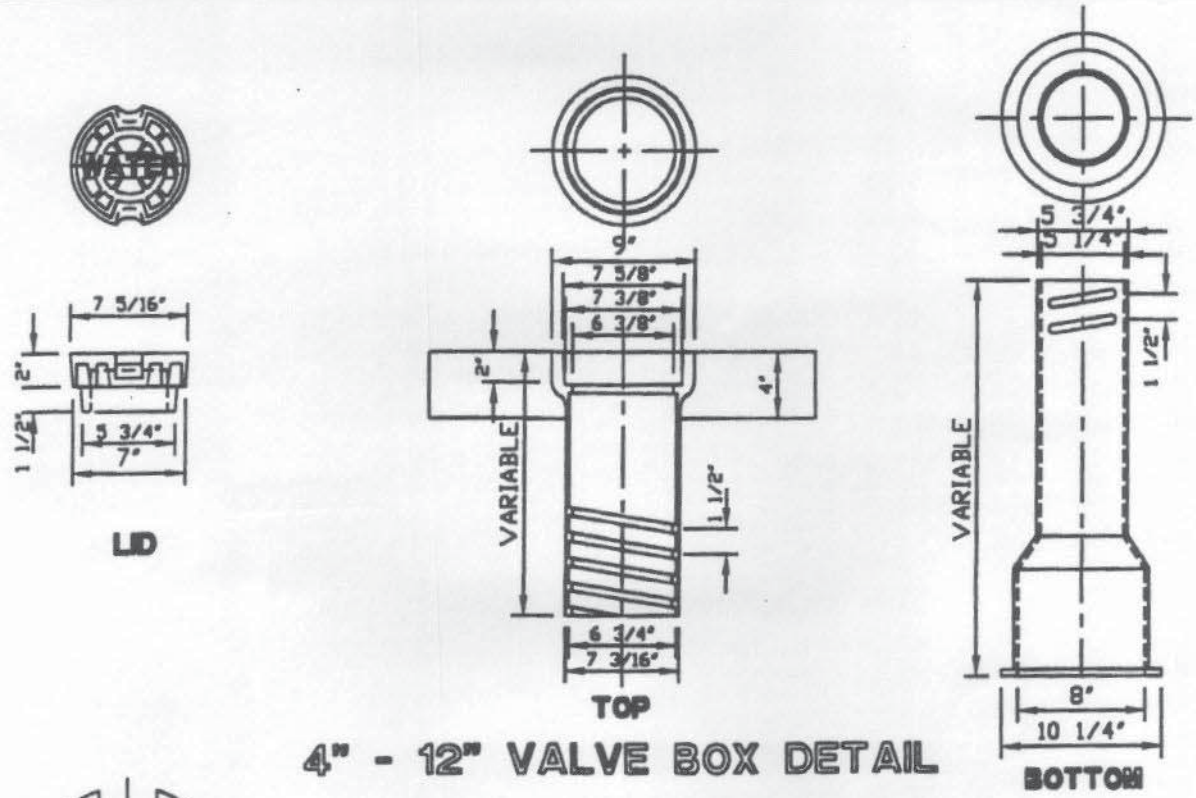

4" - 12" VALVE BOX DETAIL

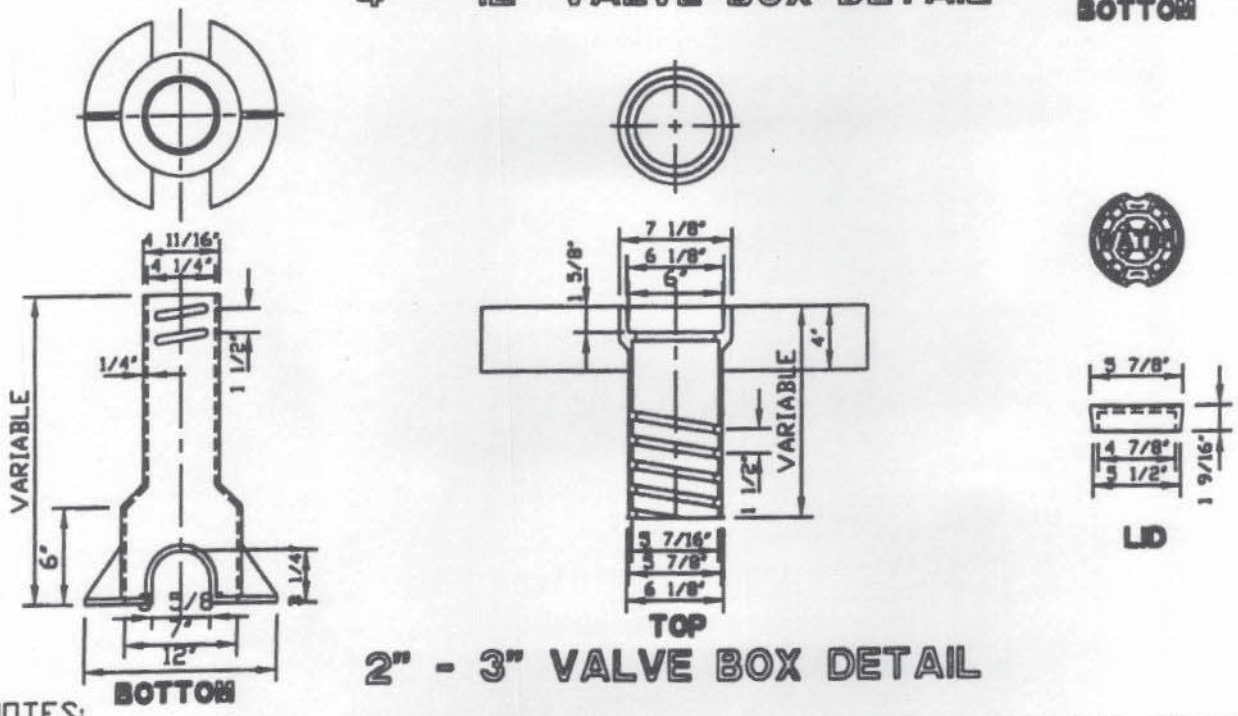

2" - 3" VALVE BOX DETAIL

NOTES:

1. WATER LINE CONTRACTOR TO PLACE 2 FOOT SQUARE CONCRETE PAD AROUND EACH WATER VALVE AFTER FINAL GRADING HAS BEEN COMPLETED AND TRENCHES HAVE SETTLED.
2. VALVE BOXES REQUIRING OVER 2 ADDITIONAL BOTTOM SECTIONS SHALL BE EXTENDED USING PVC PIPE WITH A BOTTOM AND TOP SECTION PLACED ON TOP OF THE PVC PIPE.

VALVE BOX DETAIL

CITY OF COWETA	STANDARD DRAWING: STD W 04
	LAST REVISION DATE:
DRAWN BY:	CHECKED BY:

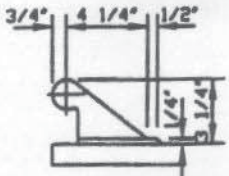

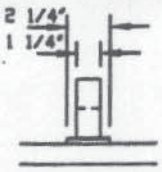

SECTION "B"-"B"

SECTION "D"-"D"

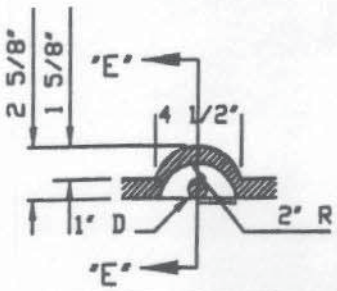

SECTION "C"-"C"

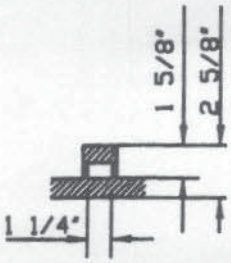

SECTION "E"-"E"

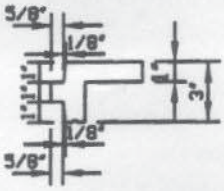

SECTION "A"-"A"

LIFTING EYE
SEE DETAIL
BELOW

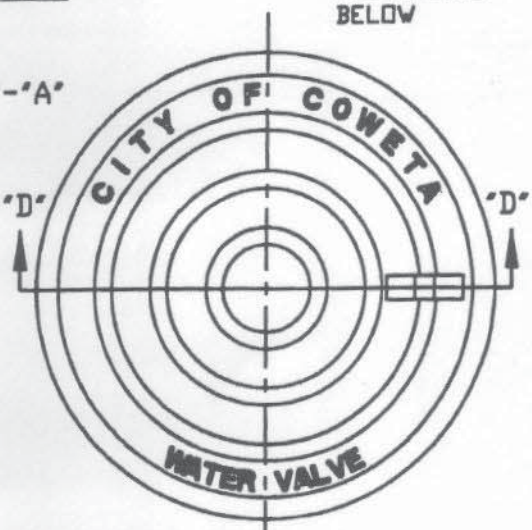

TOP OF LID

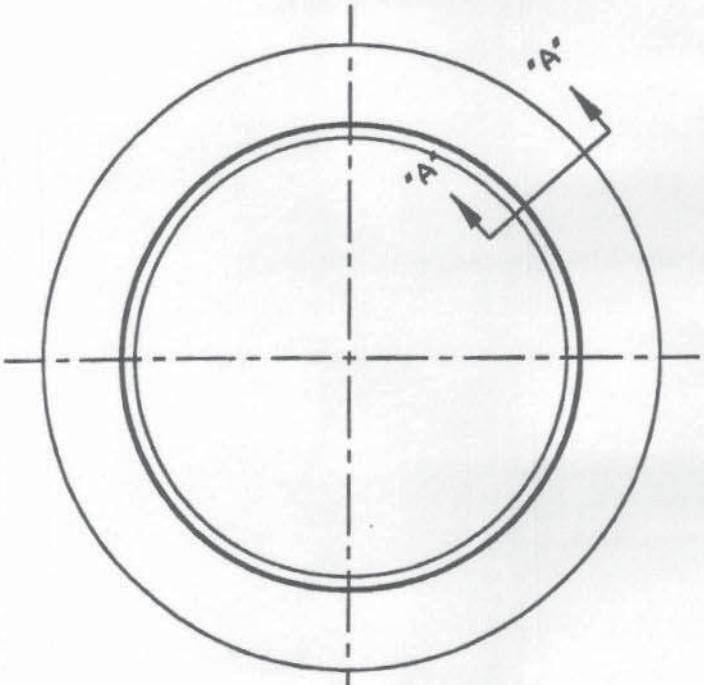

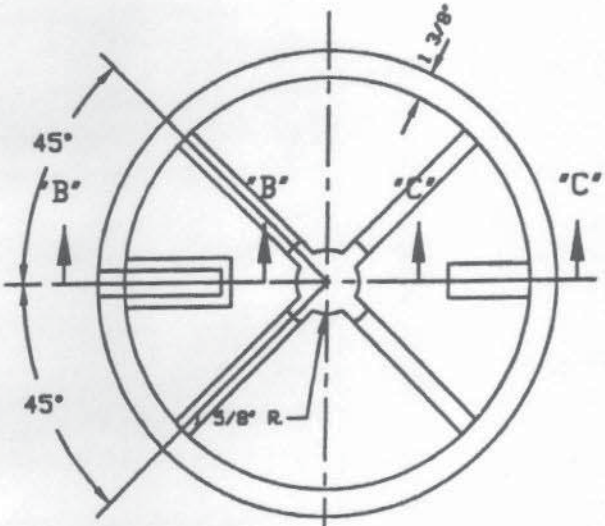

BOTTOM OF LID

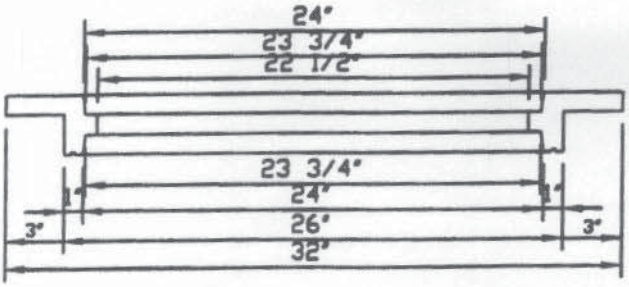

VALVE VAULT FRAME

VALVE VAULT LID

FRAME AND LID FOR VALVE VAULTS

CITY OF COWETA	STANDARD DRAWING: STD W 05
	LAST REVISION DATE:

DRAWN BY: | CHECKED BY

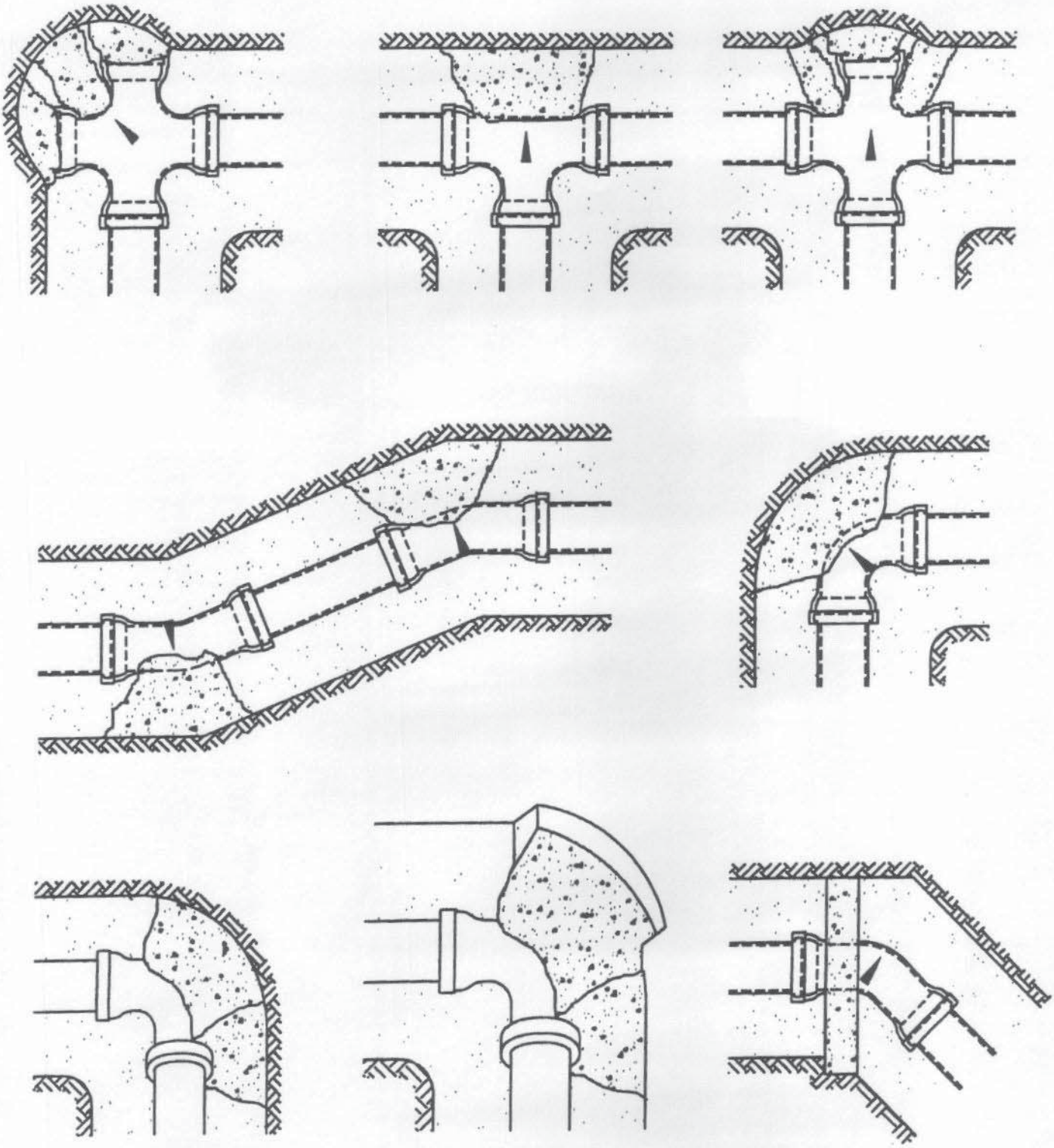

2" - 8" PIPE

LARGER

THRUST BLOCK DETAILS

CITY OF COWETA	STANDARD DRAWING: STD W 06
	LAST REVISION DATE:

DRAWN BY:	CHECKED BY:	APPROVED:	DATE:

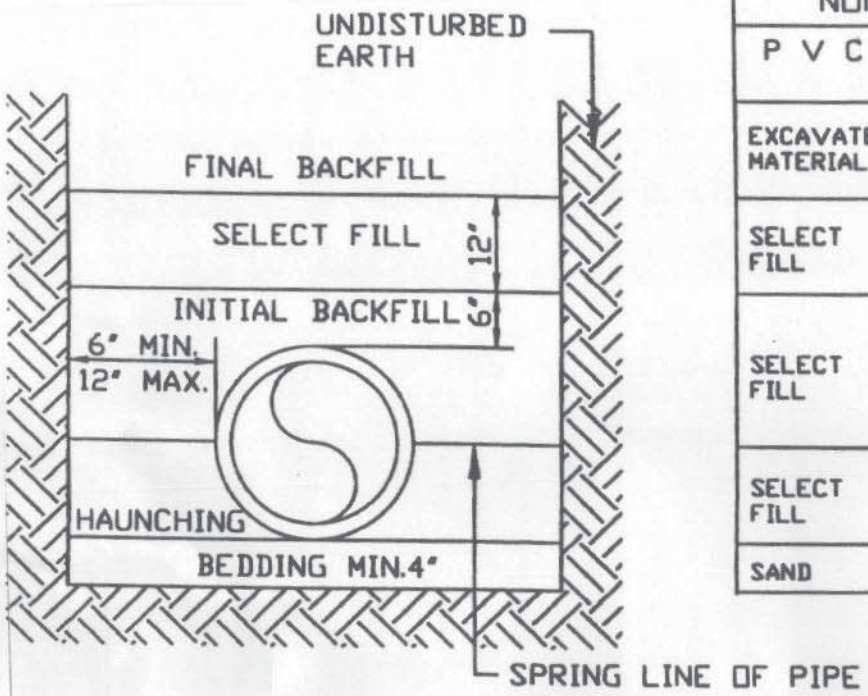

NON-PAVED AREAS		
P V C	DUCTILE IRON	CONCRETE
EXCAVATED MATERIAL	EXCAVATED MATERIAL	EXCAVATED MATERIAL
SELECT FILL	SELECT FILL	SELECT FILL
SELECT FILL	SELECT FILL	SELECT FILL
SELECT FILL	SELECT FILL	SELECT FILL
SAND	SAND	SAND

PAVED AREAS		
P V C	DUCTILE IRON	CONCRETE
CRUSHED ROCK	CRUSHED ROCK	CRUSHED ROCK
CRUSHED ROCK	CRUSHED ROCK	CRUSHED ROCK
CRUSHED ROCK	CRUSHED ROCK	CRUSHED ROCK
SAND	SAND	SAND
SAND	SAND	SAND

NOTES:
1. SELECT FILL CONSISTS OF EXCAVATED MATERIALS CONTAINING NO ROCKS LARGER THAN 2 INCHES.
2. CRUSHED ROCK SHALL BE ODOT TYPE A BASE
3. BEDDING REQUIRED ONLY FOR ROCK EXCAVATION.
4. COMPACTION REQUIREMENTS:
   a. NON- PAVED AREAS: 90% MAXIMUM STANDARD PROCTOR DENSITY FOR COHESIONLESS SOILS AND 85% FOR COHESIVE SOILS.
   b. PAVED AREAS: 95% MAXIMUM STANDARD PROCTOR DENSITY FOR COHESIONLESS SOILS.
5. FILLS OVER 10 FEET DEEP - MATERIAL IN THE AREA FROM SELECT FILL TO BEDDING SHALL BE 3/4" CRUSHER RUN WELL GRADED.
6. FLOWABLE FILL MAY BE SUBSTITUTED FOR ALL MATERIALS IN ROAD CROSSING.
7. PROVIDE AND INSTALL APPROPRIATE TRACER WIRE FOR PVC PIPE AND WARNING TAPE.

WATER PIPE BEDDING DETAIL

CITY OF COWETA	STANDARD DRAWING: STD W 01		
	LAST REVISION DATE:		
DRAWN BY:	CHECKED BY:	APPROVED:	DATE:

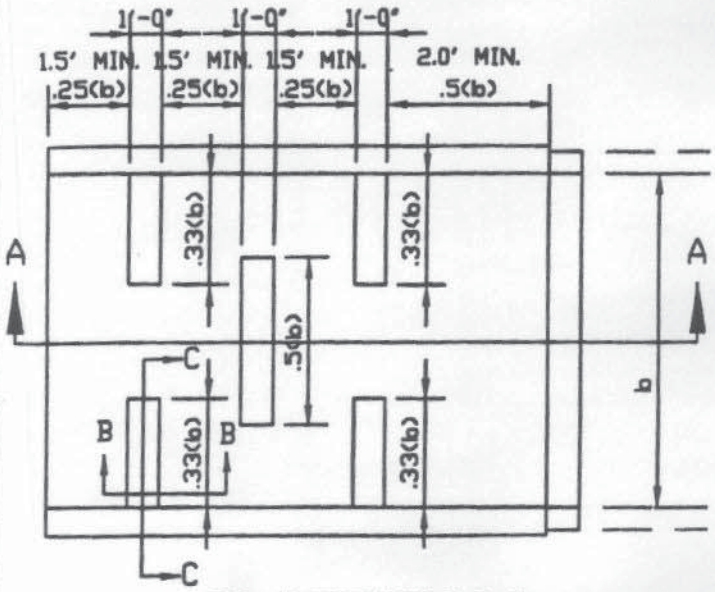

SLOPEWALL

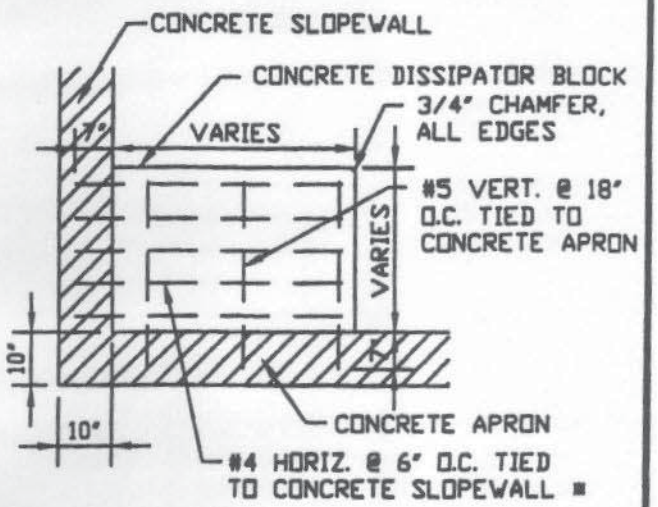

SECTION C-C

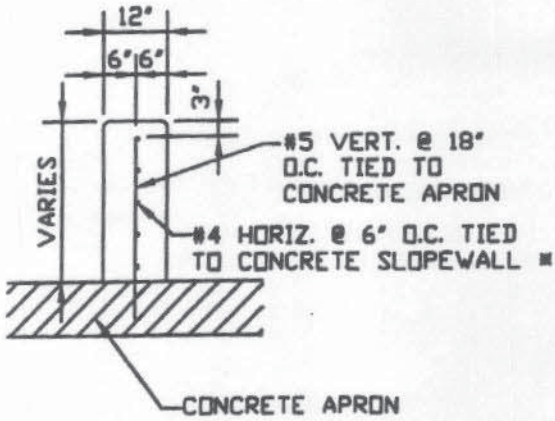

SECTION B-B

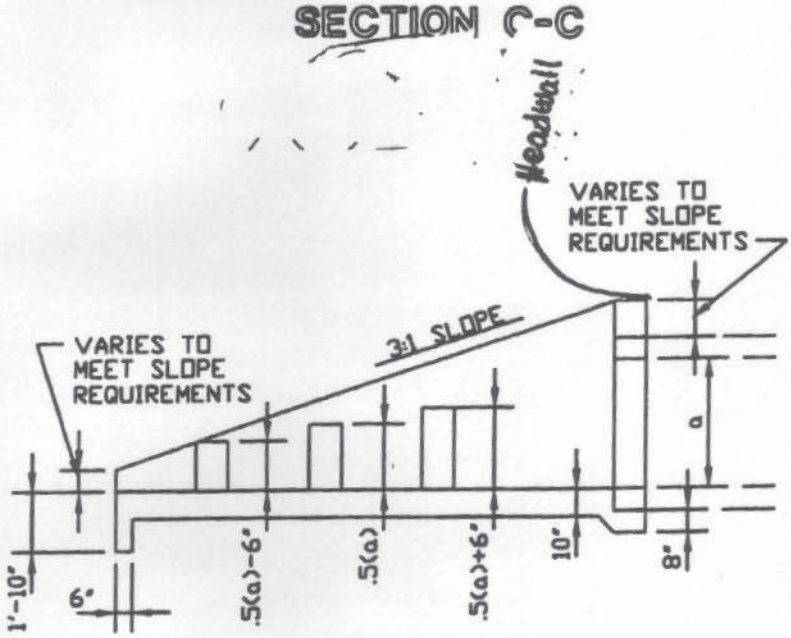

SECTION A-A

NOTES:

1. CONCTETE FC' = 3000 PSI MINIMUM @ 28 DAYS, WITH 5% + 1% AIR ENTRAINMENT.
2. REINFORCING STEEL TO MEET ASTM A-615, #4 AND SMALLER GRADE 40, #5 AND LARGER GRADE 60.
3. FOR DISSIPATOR BLOCKS ADDED TO EXISTING SLOPEWALLS ALL REINFORCING STEEL DRILLED INTO EXISTING CONCRETE TO BR ANCHORED WITH HILIT C-100 ADHESIVE OR EQUAL.
4. SLOPEWALL AND HEADWALL TO BE CONSTRUCTED TO ODOT SPECIFICATIONS,

* ON ROW 2, CUT #4 HORIZ. BARS OFF 3" FROM EACH SIDE OF DISSIPATOR WALL.

SLOPEWALL WITH DISSIPATOR DETAIL

CITY OF COWETA	STANDARD DRAWING: STD ST25
	LAST REVISION DATE:
DRAWN BY:	CHECKED BY:

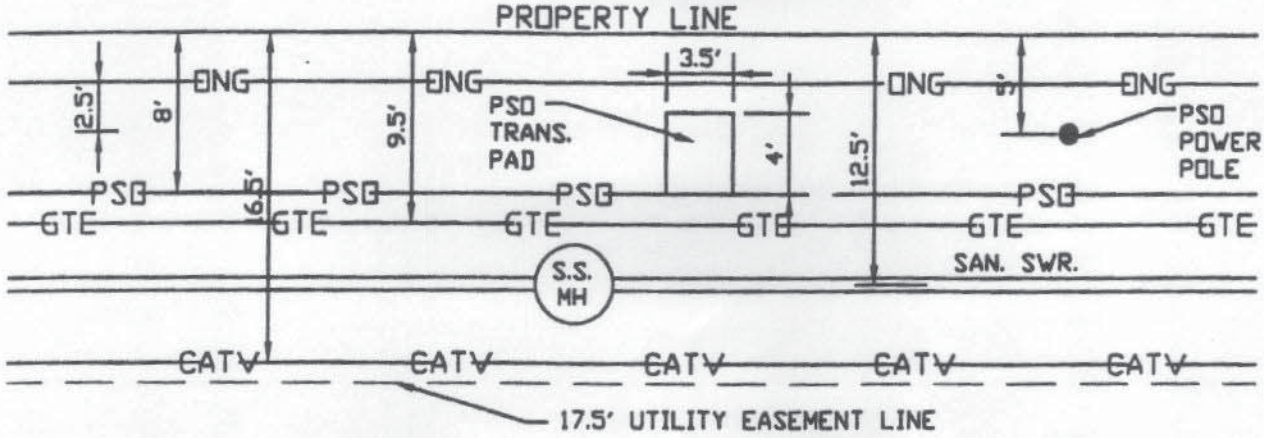

17.5' PERIMETER EASEMENT

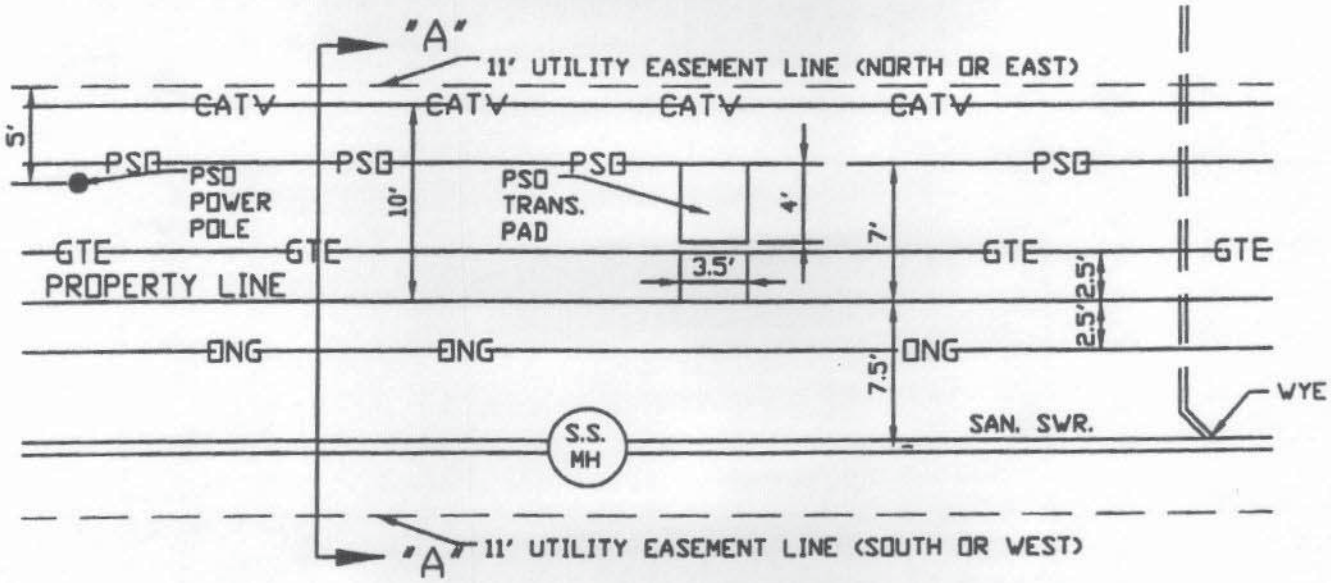

BACK TO BACK 11' EASEMENT

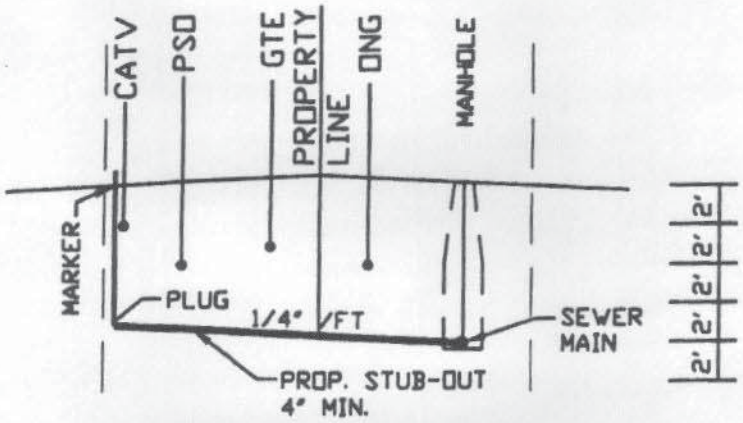

SECTION "A"-"A"

BACKYARD PERIMETER UTILITY LOCATIONS

CITY OF COWETA	STANDARD DRAWING: STD UL 01
	LAST REVISION DATE:

DRAWN BY: | CHECKED BY:

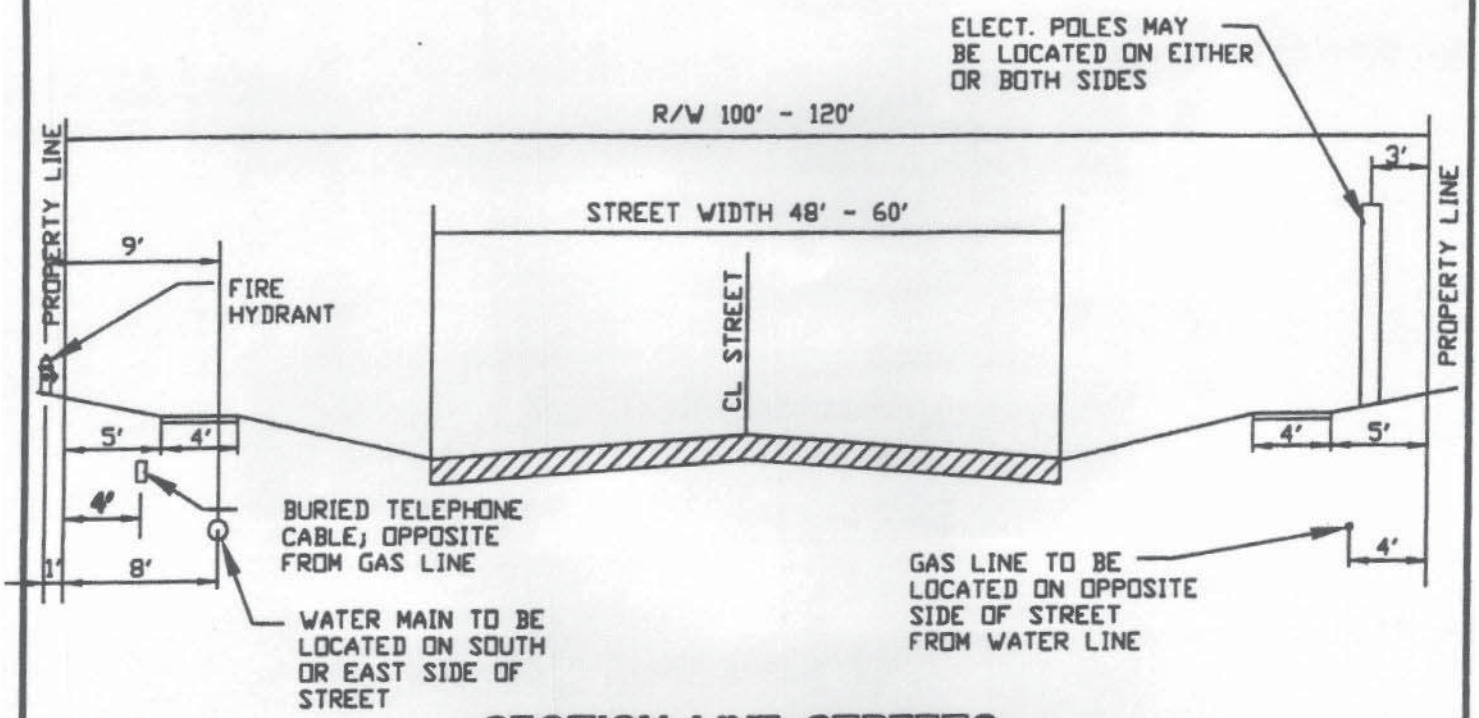

SECTION LINE STREETS

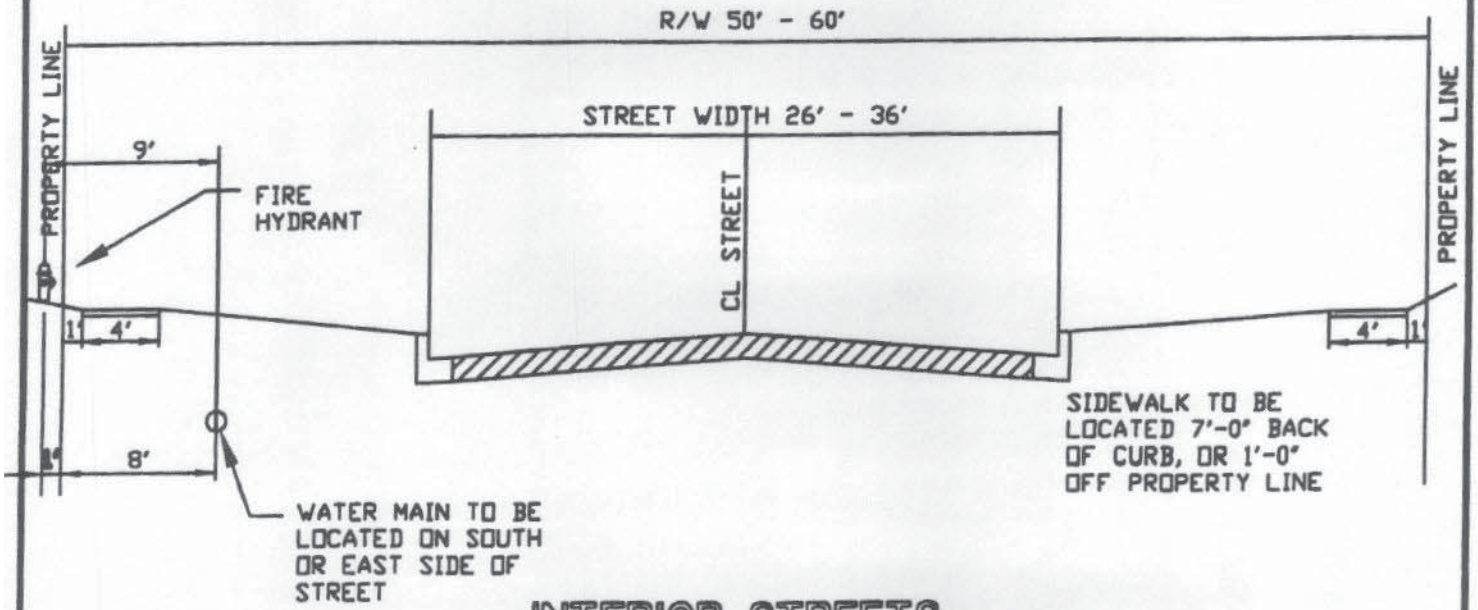

INTERIOR STREETS

STREET UTILITY LOCATION

CITY OF COWETA	STANDARD DRAWING: STD UL 02
	LAST REVISION DATE:

DRAWN BY: | CHECKED BY:

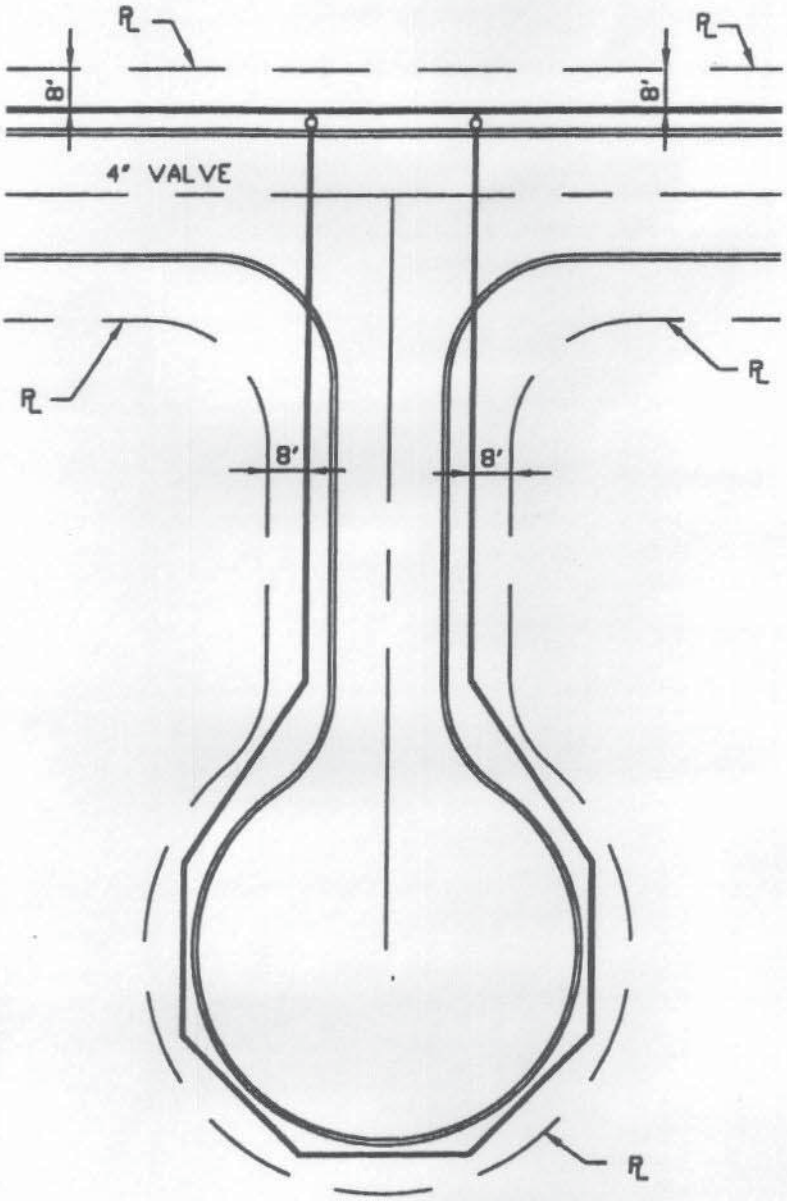

WATERLINE ROUTE AT CUL-DE-SAC

CITY OF COWETA	STANDARD DRAWING: STD UL 03
	LAST REVISION DATE:

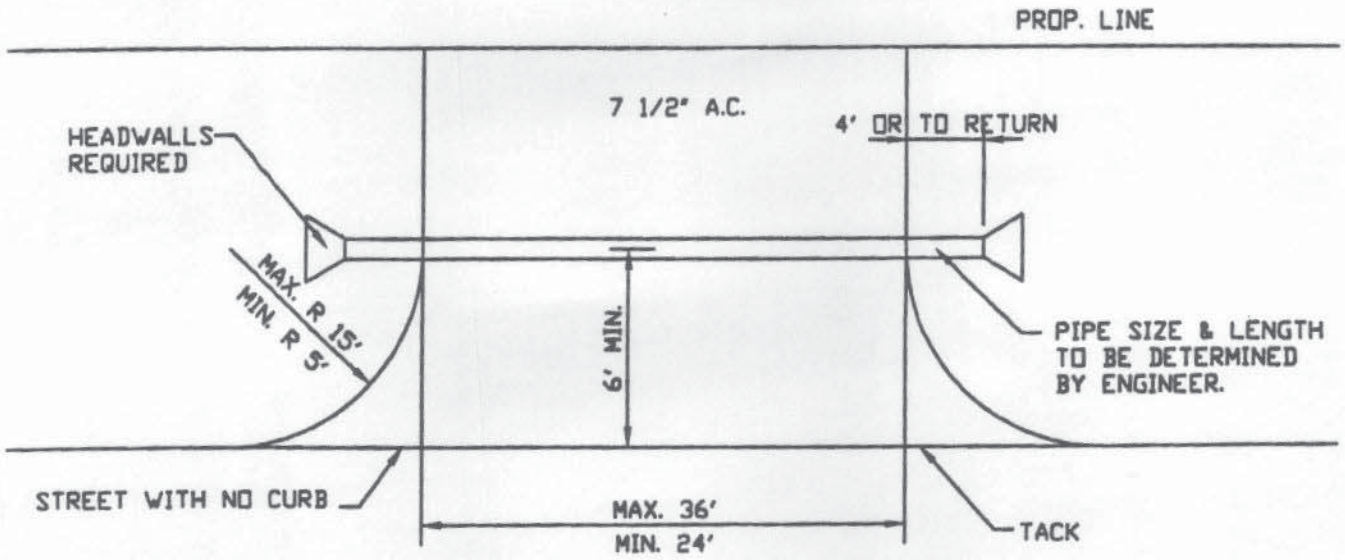

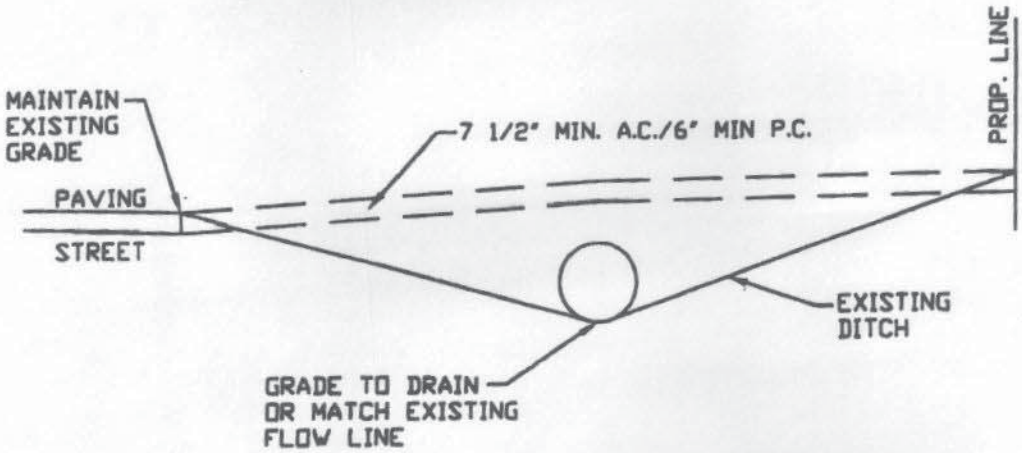

DRIVEWAY SECTION

COMMERCIAL DRIVEWAY ON STREET WITHOUT CURB

CITY OF COWETA	STANDARD DRAWING: STD ST 20
	LAST REVISION DATE:
DRAWN BY:	

SEE STANDARD DRAWING STD ST 09
FOR BARRICADE DETAIL

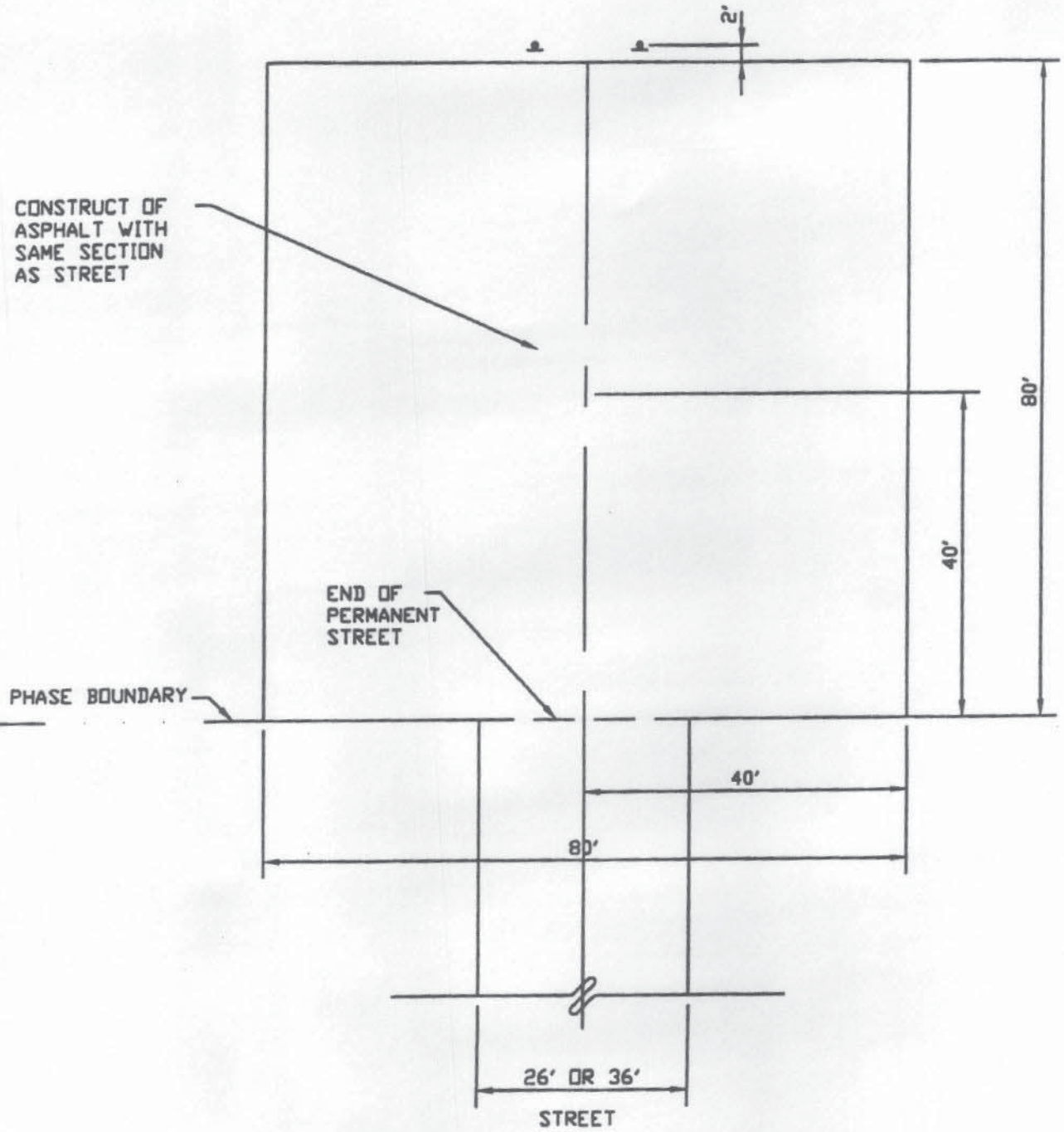

TEMPORARY TURN-AROUND

CITY OF COWETA	STANDARD DRAWING: STD ST 21
	LAST REVISION DATE:

DRAWN BY:

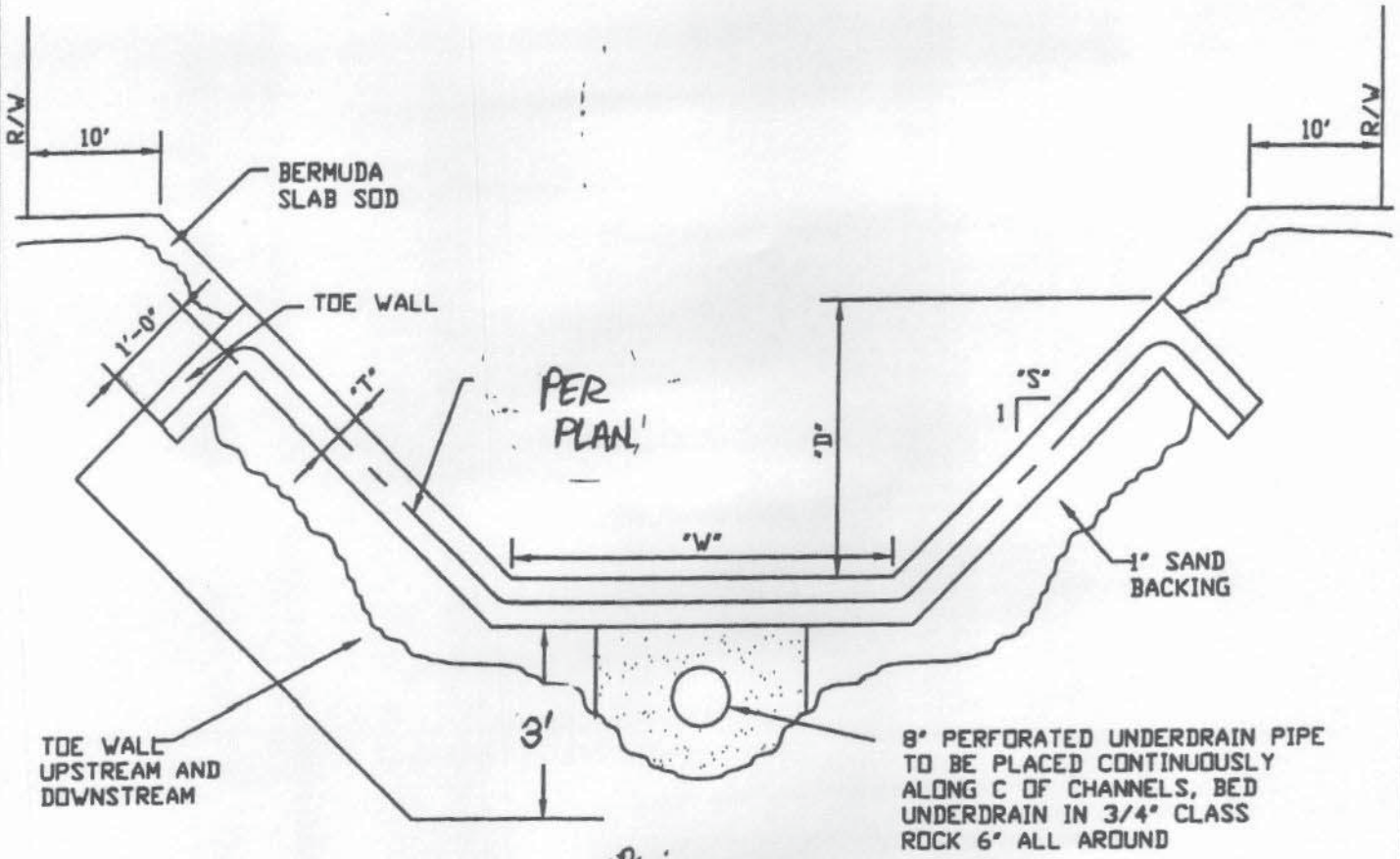

2'-0' DEEP TOE WALL IS GOOD. HOWEVER, IN SANDY SOILS MAY NEED TO GO A LITTLE DEEPER

NOTES:
1. 3500 P.S.I. CONCRETE WITH NOT OVER 3" SLUMP.
2. "W", "D", "T", AND "S" TO BE SHOWN ON THE PLAN.
3. SEALED SAW CUT JOINTS @ 15' C/C.
4. SEALED 3/4" EXPANSION JOINTS @ 90' C/C.
5. TWO FEET (2') DEEP TOE WALL TO BE CONSTRUCTED AT EACH END.
6. EXTEND REINFORCING STEEL INTO TOP WALL AND TOE WALL.
7. WHERE REQUIRED ENERGY DISSIPATORS WILL BE CONSTRUCTED AS PART OF THE CHANNEL.

CONCRETE LINED CHANNEL

CITY OF COWETA	STANDARD DRAWING: STD ST 22
	LAST REVISION DATE:
DRAWN BY:	CHECKED BY:

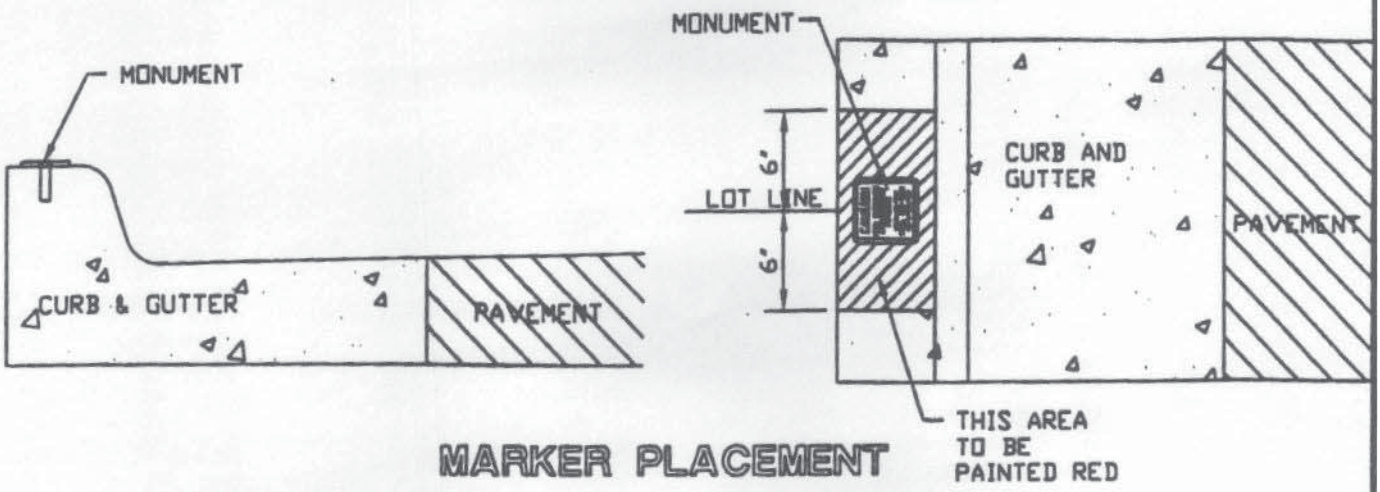

MARKER PLACEMENT

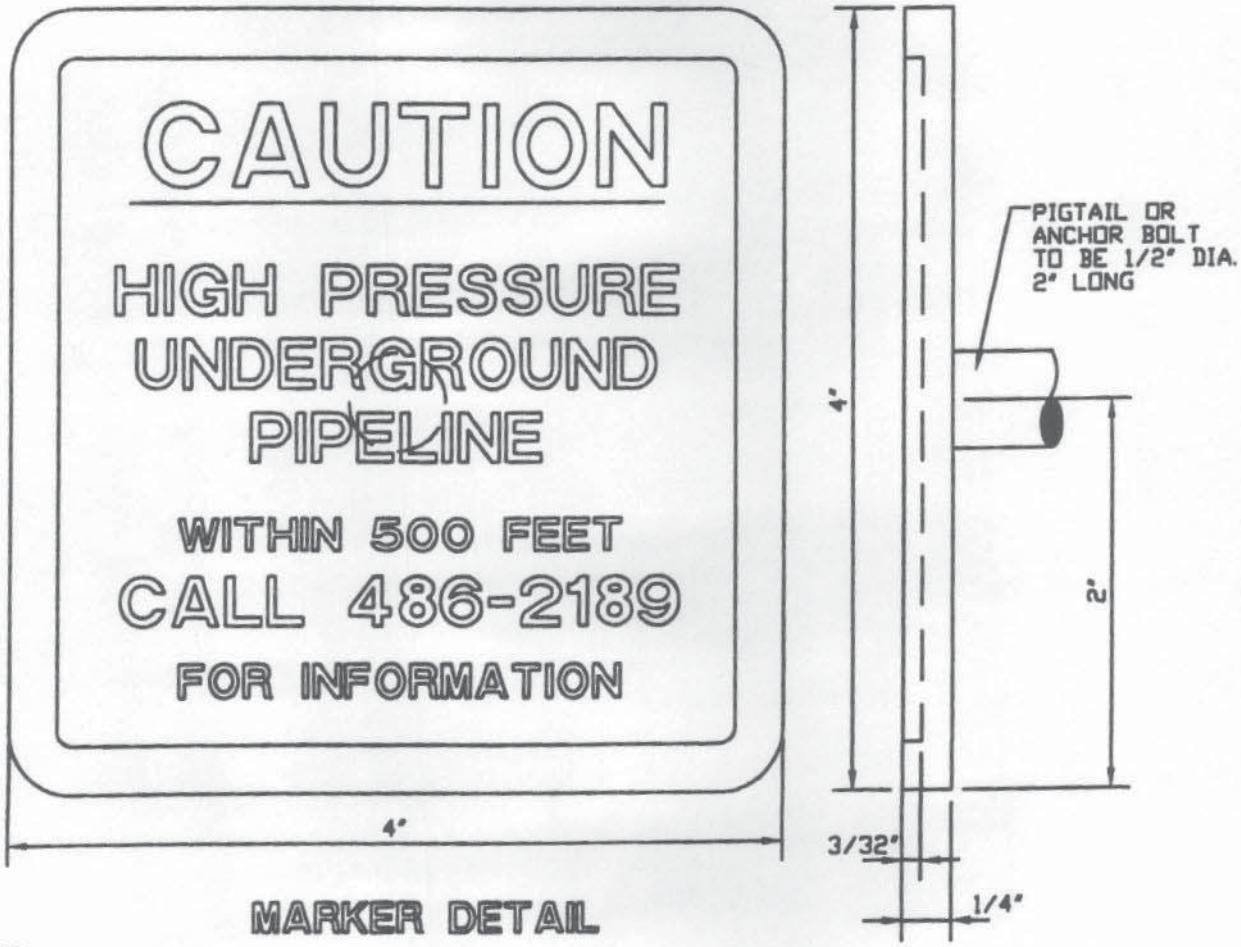

MARKER DETAIL

NOTES:

1. MONUMENT TO BE CAST FROM YELLOW BRASS. LETTERS TO BE FLUSH WITH BORDER.
2. MONUMENT TO BE PLACED ON THE CURB AT THE LOT LINE.

HIGH PRESSURE PIPELINE MARKER

CITY OF COWETA	STANDARD DRAWING: STD ST 23
	LAST REVISION DATE:

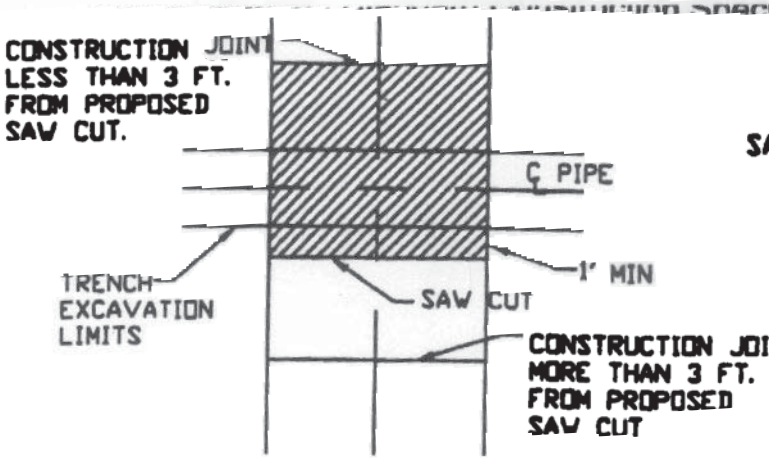

TYP. STREET, DRIVEWAY, OR SIDEWALK WITH RIGHT ANGEL CROSSING

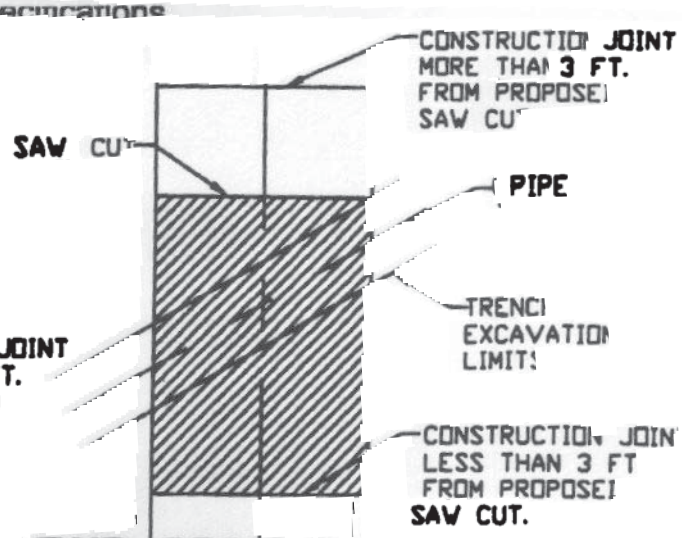

TYP. DRIVEWAY OR SIDEWALK W/ DIAGONAL CROSSING

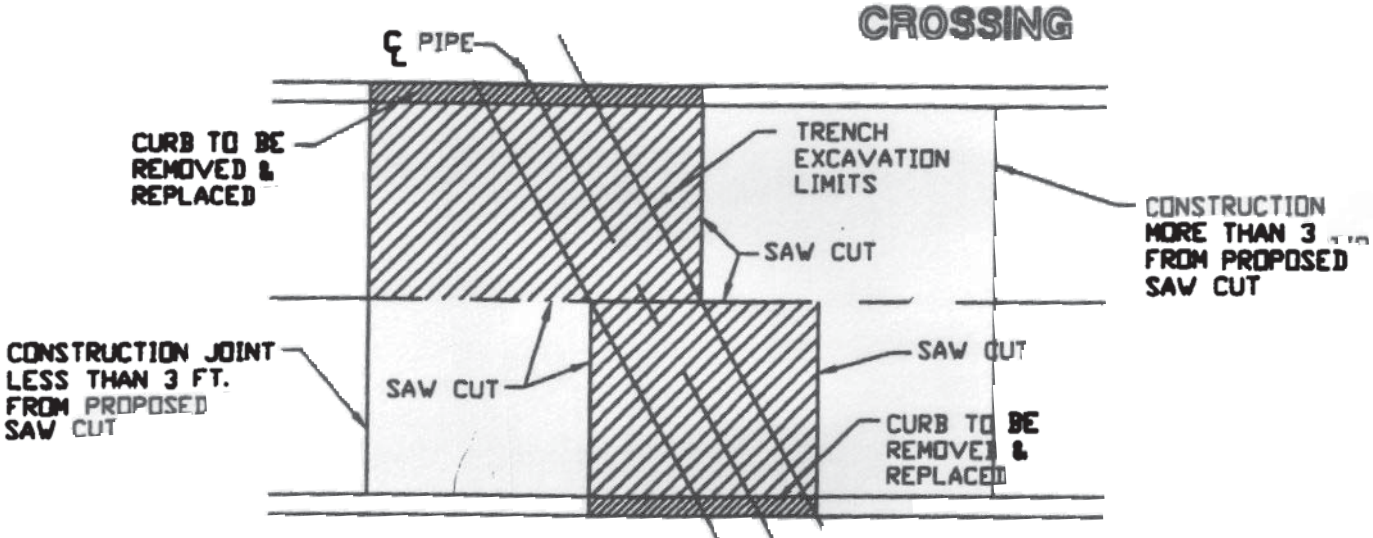

TYPICAL STREET WITH DIAGONAL CROSSING

NOTES:

1. REMOVE AND REPLACE PAVEMENT WITHIN SHADED ARES BOUNDED BY SAW CUTS AND/OR CONSTRUCTION JOINTS.
2. FOR DIAGONAL CROSSING, REPLACE PAVEMENT USING SQUARED CUTS, AS SHOWN. PAY QUANTITY WILL INCLUDED SQUARED AREA.
3. REMOVE AND REPLACE PAVEMENT TO CONSTRUCTION JOINT IF LESS THAN 3 FT. FROM PROPOSED SAW CUT. EXTRA AREA WILL BE INCLUDED IN PAY QUANTITY.
4. FOR LONGITUDINAL INSTALLATIONS: REMOVE AND REPLACE PAVEMENT AND CURB TO EDGE OF STREET, IF THE SAW CUT IS LESS THAN 3 FT. FROM THE OUTSIDE EDGE OF THE PAVEMENT OR CURB. AVOID SAW CUTS IN THE EXISTING WHEEL LINE. TRENCHES EXCEEDING 300 L.F. SHALL BE BACKFILLED AND MADE DRIVEABLE.
5. ALL CONSTRUCTION JOINTS SHALL BE REESTABLISHED IN ACCORDANCE WITH THE CITY OF BROKEN ARROW STANDARDS FOR PORTLAND CEMENT CONCRETE PAVEMENT. WHEN A PAVEMENT SECTION IS REMOVED ALONG AN EXISTING LONGITUDINAL CONSTRUCTION JOINT, THE NEW PAVEMENT SHALL BE DOWELLED TO THE PAVEMENT ADJACENT TO THE JOINT.

STANDARD DETAIL FOR PAVEMENT CUTS

CITY OF COWETA	STANDARD DRAWING: STD ST 24
DRAWN BY:	LAST REVISION:

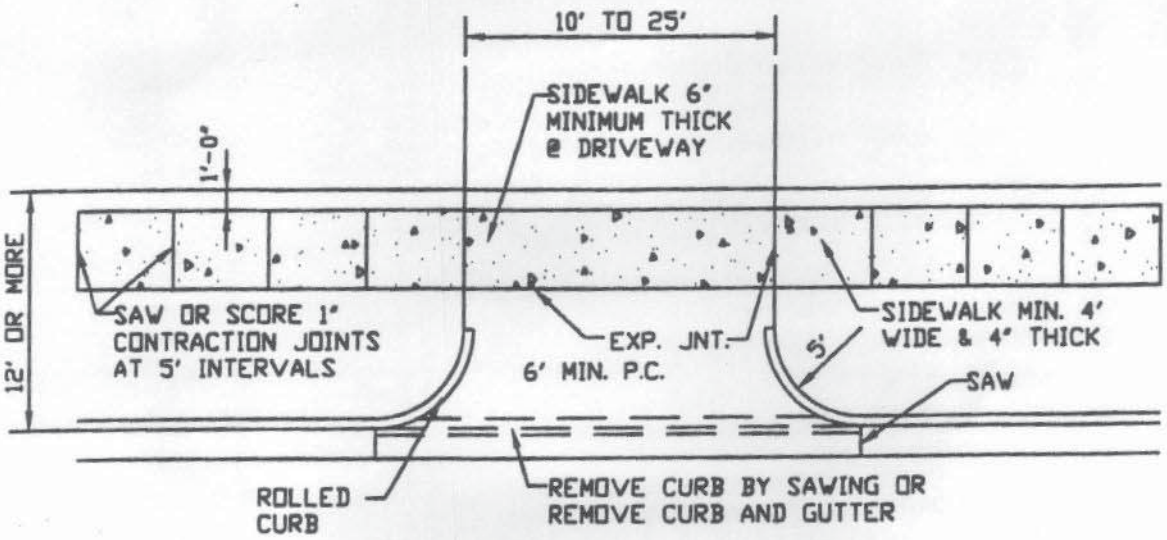

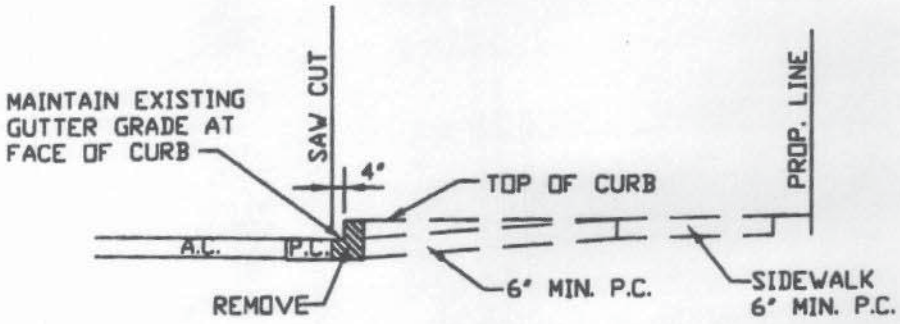

ASPHALT STREET DRIVEWAY SECTION

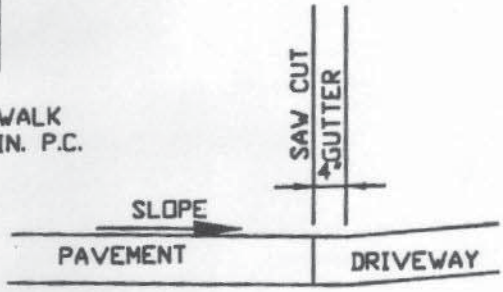

SECTION AT GUTTER

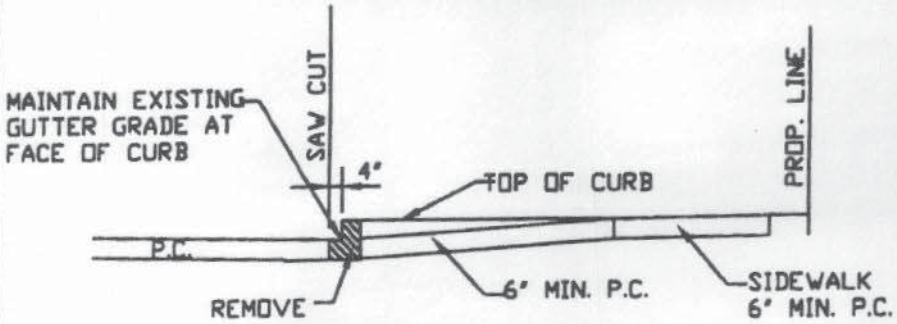

CONCRETE STREET DRIVEWAY SECTION

RESIDENTIAL CONCRETE DRIVEWAY

CITY OF COWETA	STANDARD DRAWING: STD ST 15
	LAST REVISION DATE:

DRAWN BY: CHECKED BY:

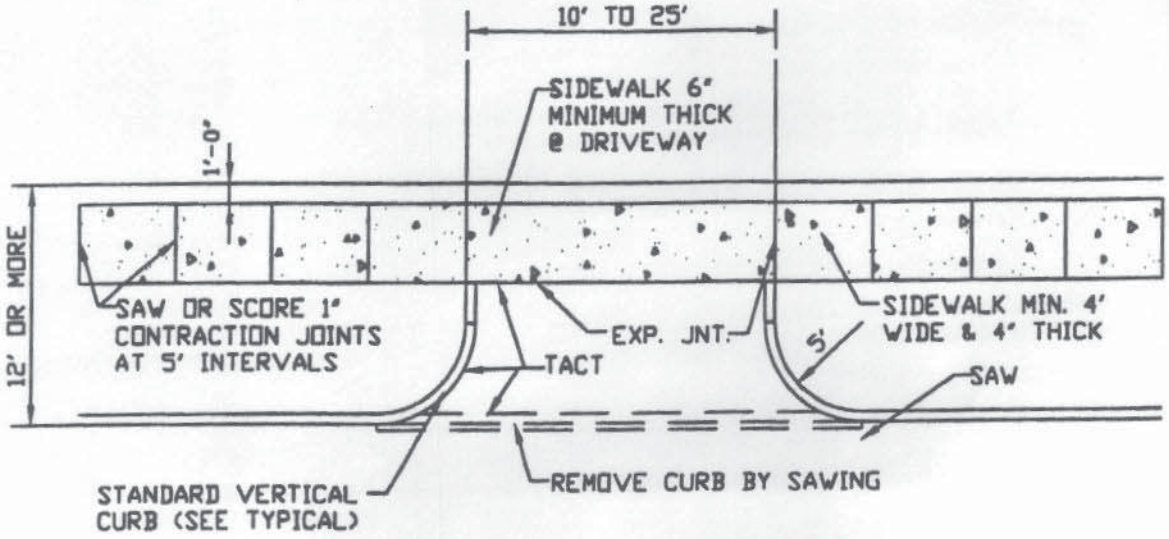

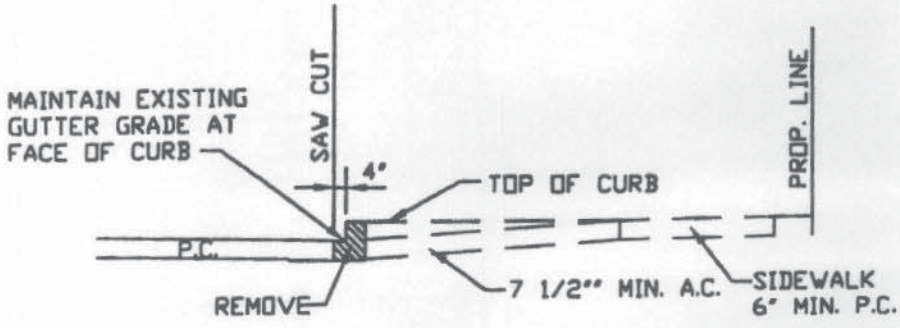

DRIVEWAY SECTION

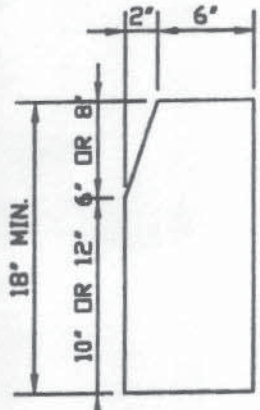

VERTICAL CURB
(TYPICAL)

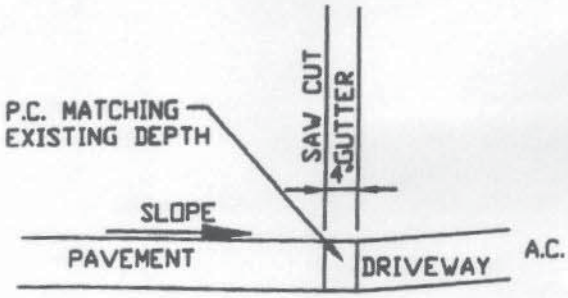

SECTION AT GUTTER

RESIDENTIAL ASPHALT DRIVEWAY TO CONCRETE STREET

CITY OF COWETA		STANDARD DRAWING: STD ST 16	
		LAST REVISION DATE:	
DRAWN BY:	CHECKED BY:	APPROVED:	DATE:

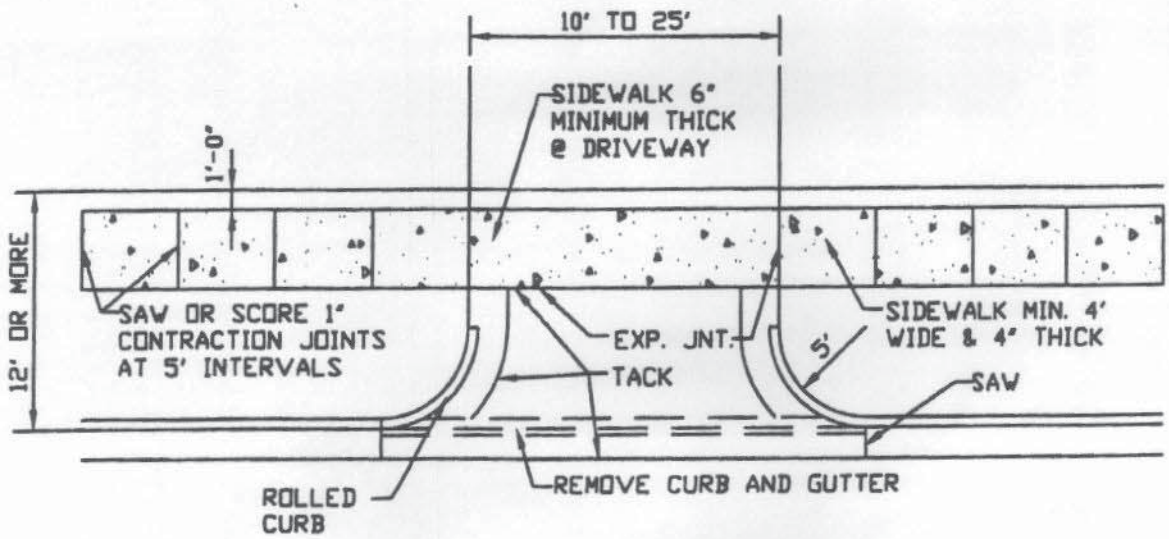

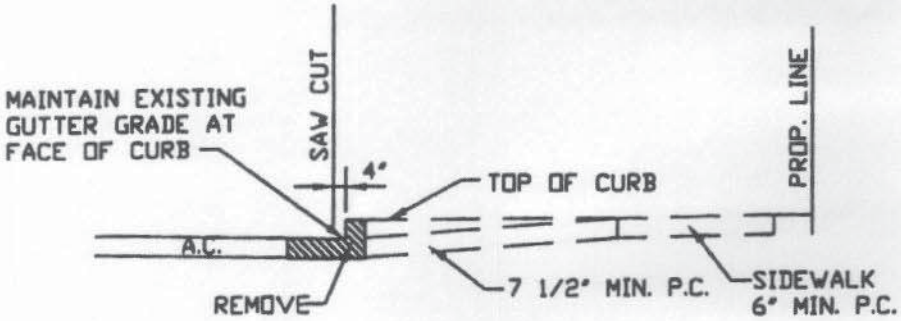

ASPHALT STREET DRIVEWAY SECTION

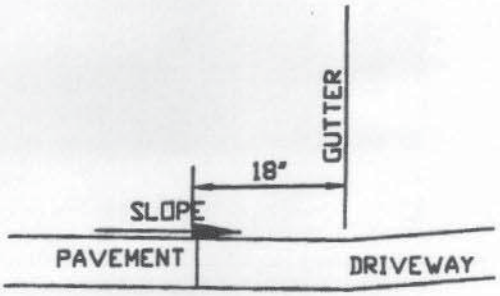

SECTION AT GUTTER

RESIDENTIAL ASPHALT DRIVEWAY TO ASPHALT STREET

CITY OF COWETA	STANDARD DRAWING: STD ST 17
	LAST REVISION DATE:

DRAWN BY:	CHECKED BY:	APPROVED	DATE

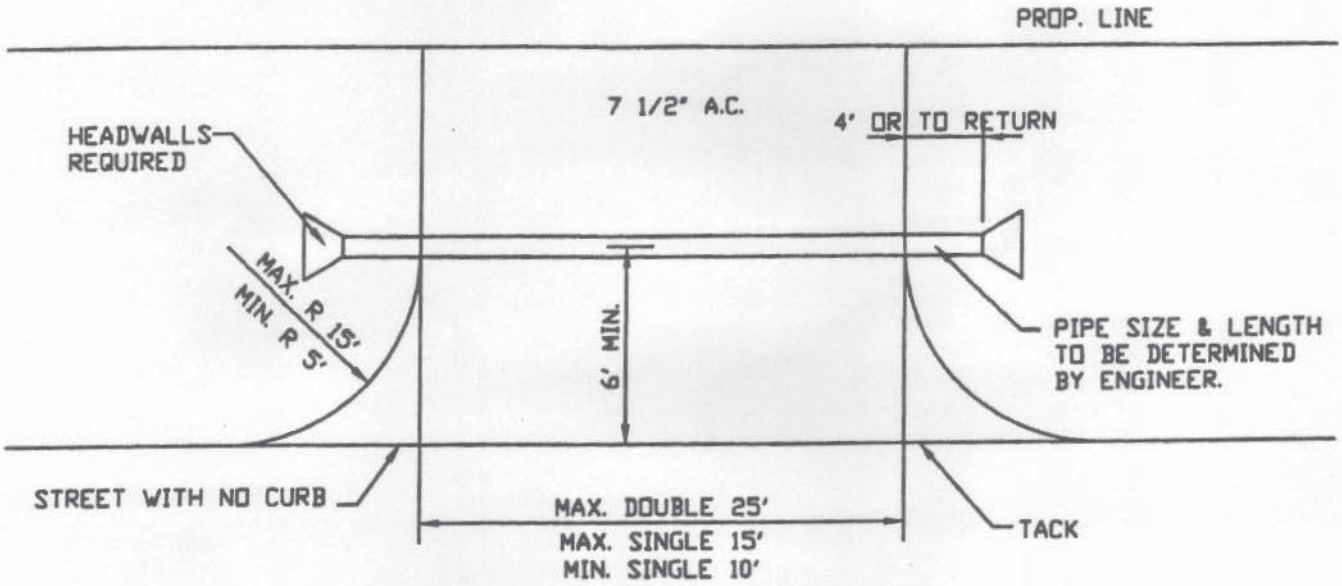

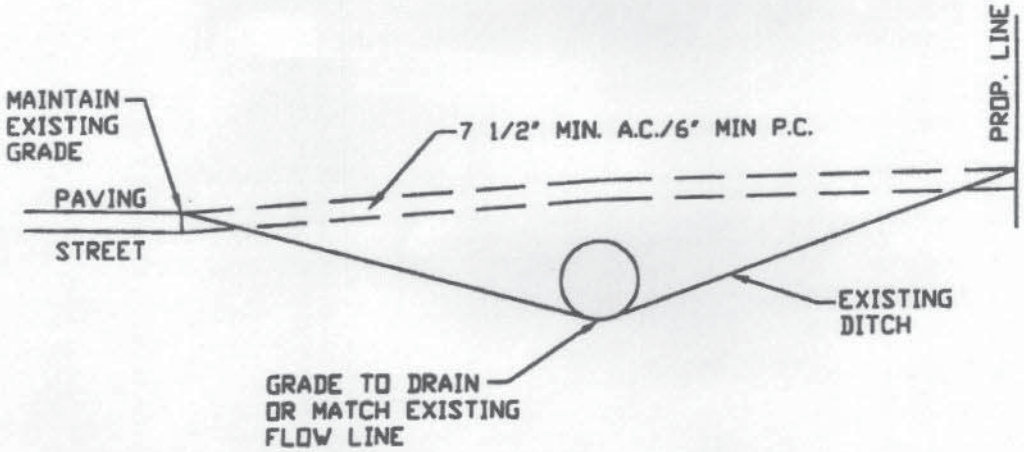

DRIVEWAY SECTION

RESIDENTIAL DRIVEWAY ON STREET WITHOUT CURB

CITY OF COWETA	STANDARD DRAWING: STD ST 18
	LAST REVISION DATE:
DRAWN BY:	CHECKED BY:	APPROVED:	DATE:

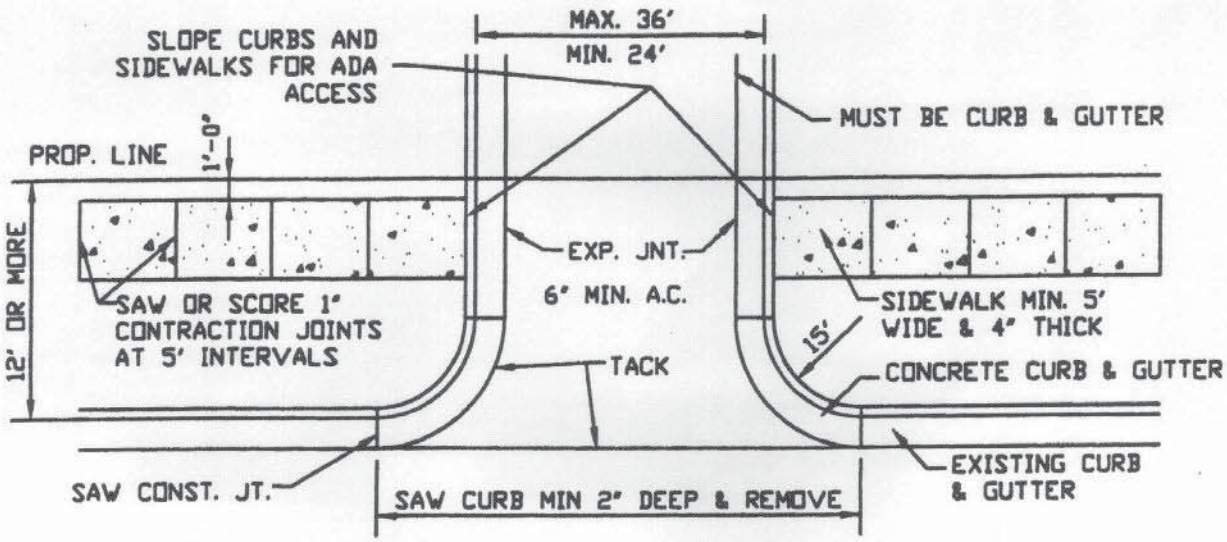

REGULAR DRIVE

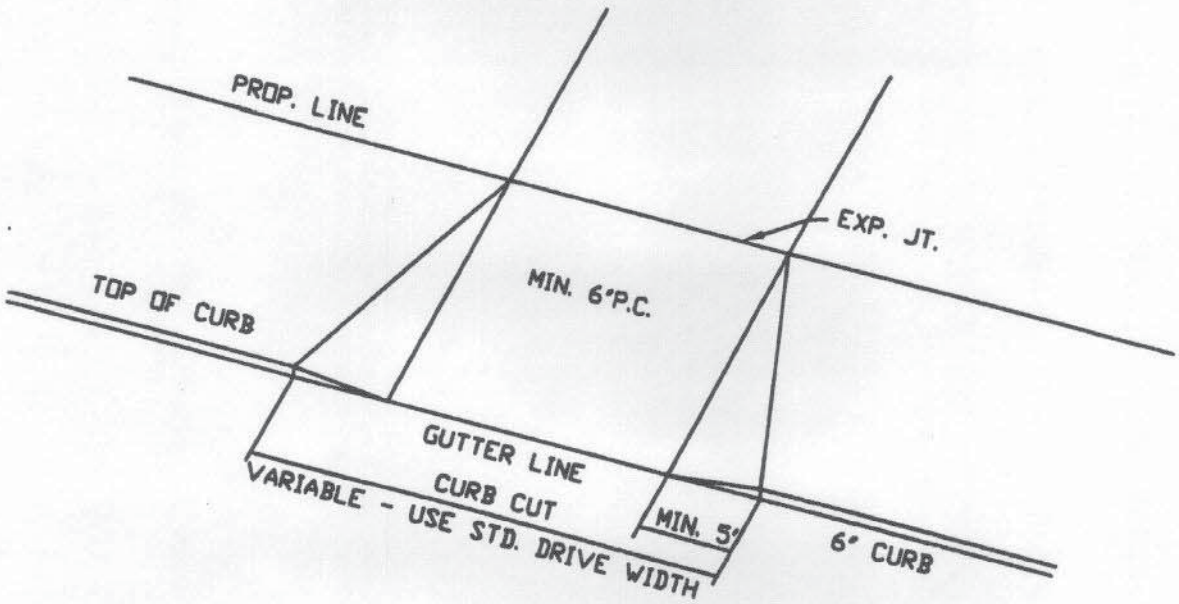

RAMP TYPE DRIVE

COMMERCIAL DRIVEWAY

CITY OF COWETA	STANDARD DRAWING: STD ST 19
	LAST REVISION DATE:

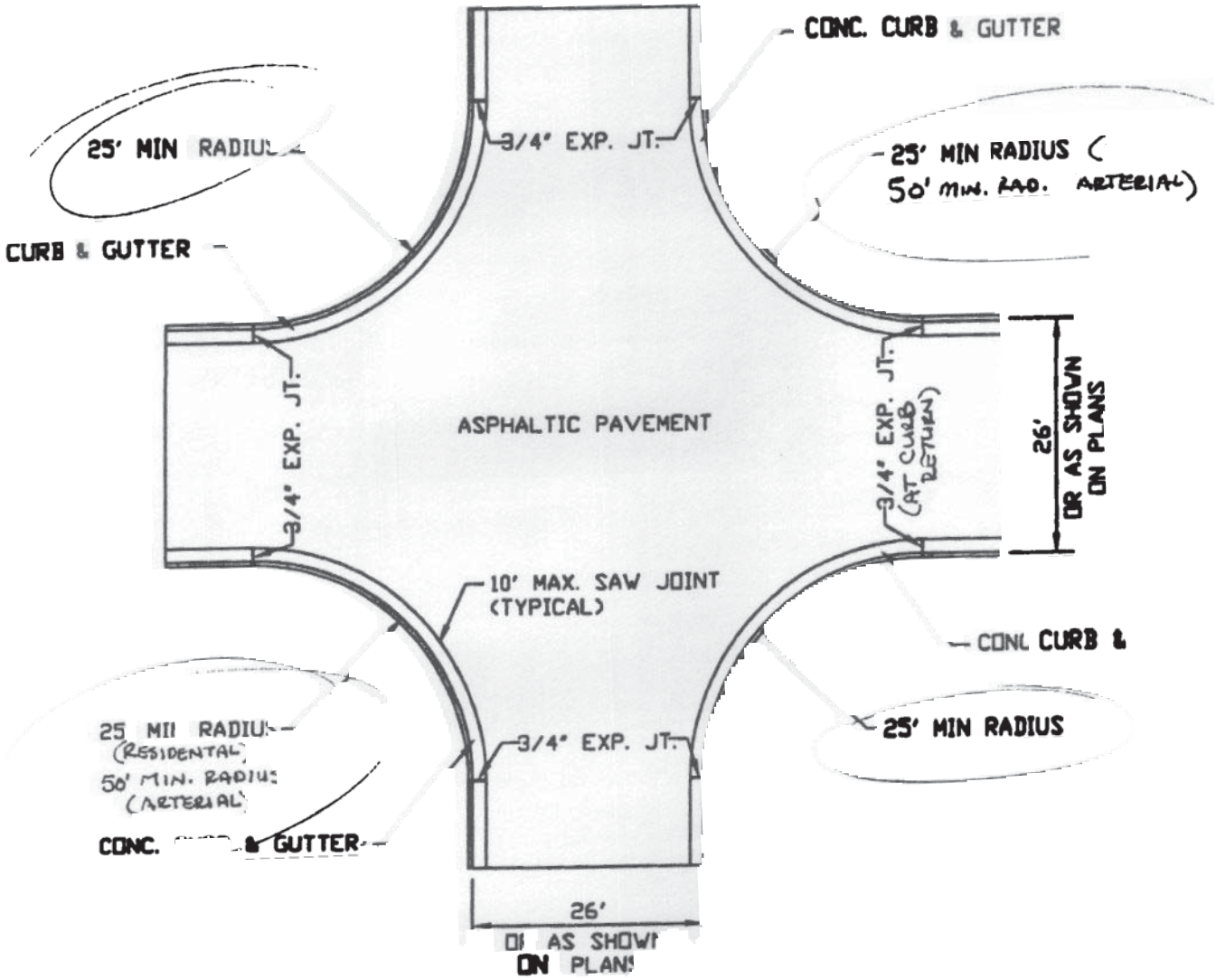

NOTES:
1. SIDEWALKS TO BE LOCATED PER THE LAND SUBDIVISION CODE
2. WHEELCHAIR RAMPS PER STANDARD ST 06

ASPHALTIC CONCRETE INTERSECTION LAYOUT

DRAWN BY: CHECKED

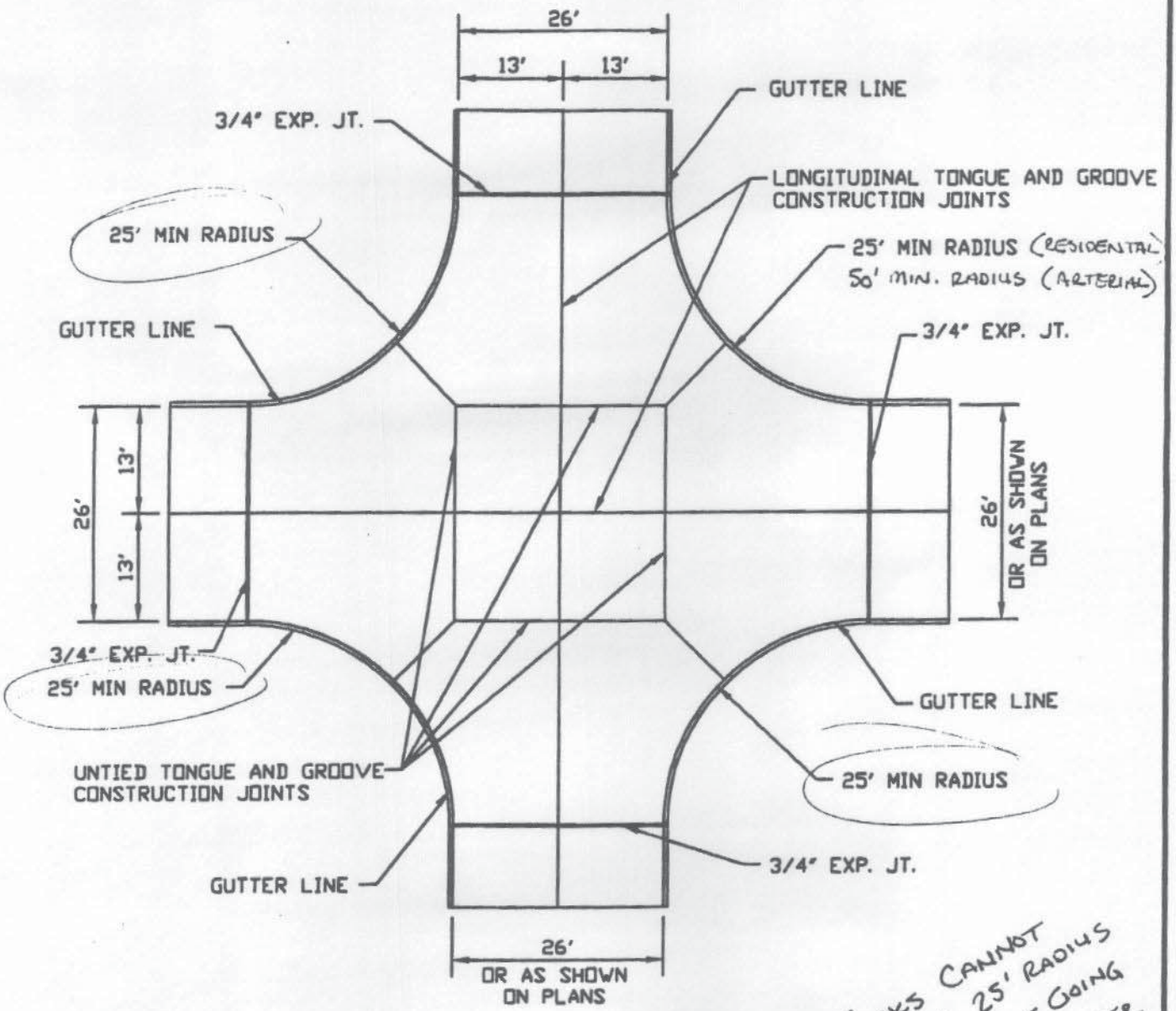

TRUCKS CANNOT MAKE A 25' RADIUS TURN W/OUT GOING INTO THE OTHER LANE. THEY NEED 40'-45' MIN

NOTES:

1. SEE SECTION 204.04 FOR SPECIFIC REQUIREMENTS FOR CONCRETE STREET JOINTS AND TIEBARS.
2. SEE SECTION 204.05 FOR SPECIFIC REQUIREMENTS FOR CURB AND GUTTER JOINTS AND TIEBARS.

CONCRETE STREET INTERSECTION LAYOUT

CITY OF COWETA	STANDARD DRAWING: STD ST 11
	LAST REVISION DATE:

DRAWN BY:	CHECKED BY:	APPROVED:	DATE:

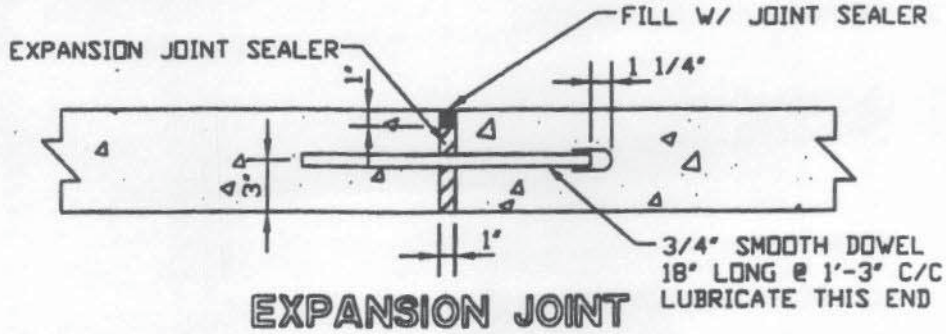

EXPANSION JOINT

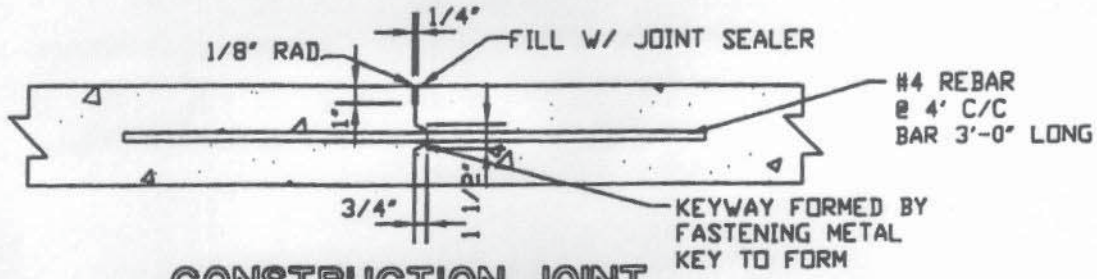

CONSTRUCTION JOINT

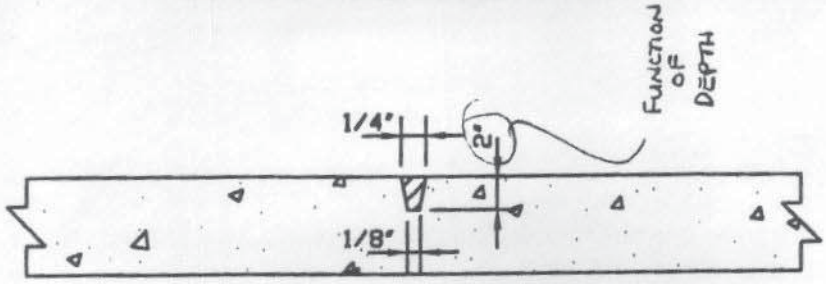

SAWED TRANSVERSE JOINT

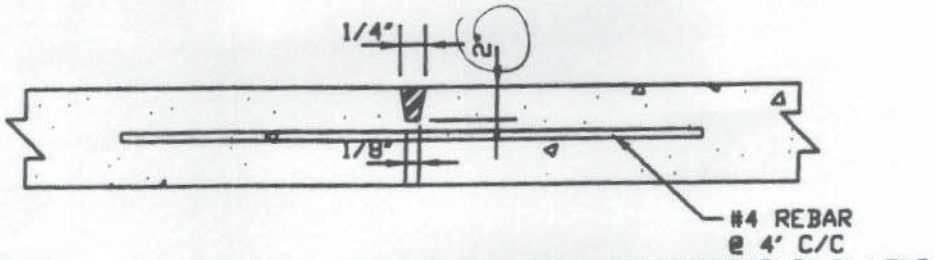

SAWED LONGITUDINAL JOINT

NOTES:

1. SEE SECTION 204.04 FOR JOINT SPACING AND TIEBAR REQUIREMENTS.
2. SAWED JOINTS SHALL BE SEALED AS REQUIRED IN SECTION 200.

STANDARD CONCRETE PAVEMENT JOINTS

CITY OF COWETA	STANDARD DRAWING: STD ST 12
	LAST REVISION DATE:

DRAWN BY:	CHECKED BY:	APPROVED:	DATE:

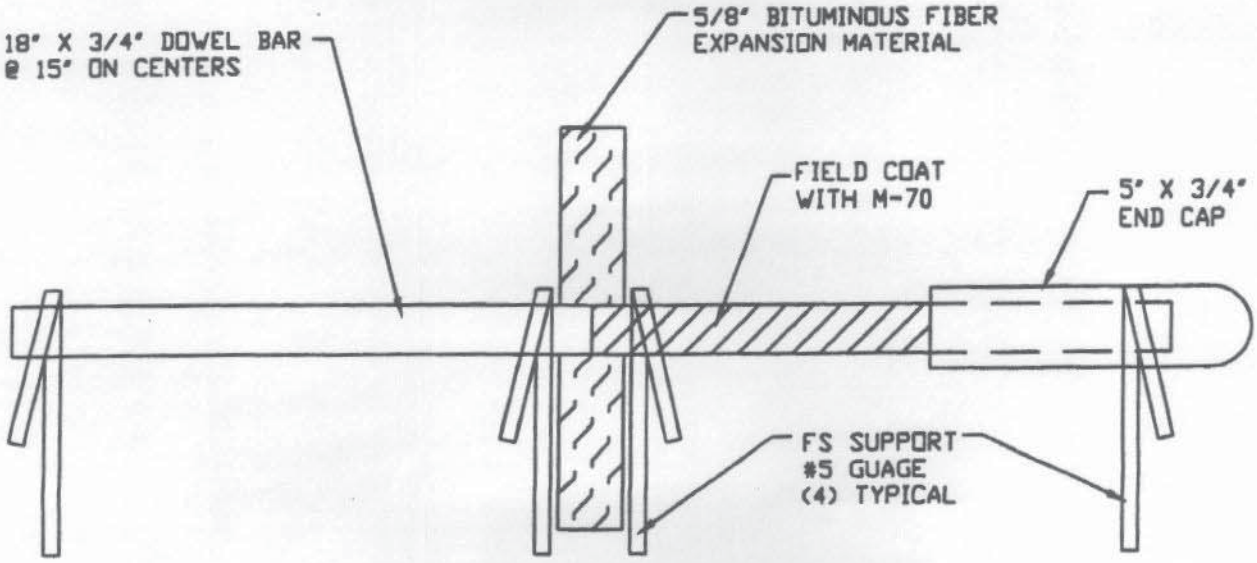

END VIEW

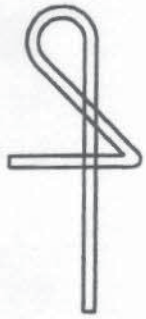

FS SUPPORT DETAIL

NOTES:

1. ANY DEVICE USED FOR SUPPORTING DOWELS SHALL HAVE SUFFICIENT RIGIDITY AND BE SO HELD IN PLACE DURING CONCRETE PLACEMENT THAT DOWELS WILL BE IN TRUE POSITION IN THE FINISHED PAVEMENT. ANY DEVICE NOT PRODUCING THE DESIRED RESULTS SHALL BE DISCONTINUED.
2. DOWEL BARS SHALL HAVE A SHOP OR FIELD COAT OF RED LEAD OR ZINK CHROMATE FOR FULL LENGTH OF BAR AND SHALL HAVE A FIELD COAT OF M-70 ON THE FREE END (MAXIMUM 1/2 LENGTH OF BAR).
3. EXPANSION JOINT FILLER MATERIAL SHALL BE BITUMINOUS FIBER AND OF NON-EXTRUDING MATERIAL.

DOWEL BAR ASSEMBLY DETAIL

CITY OF COWETA	STANDARD DRAWING: STD ST 13
	LAST REVISION DATE:

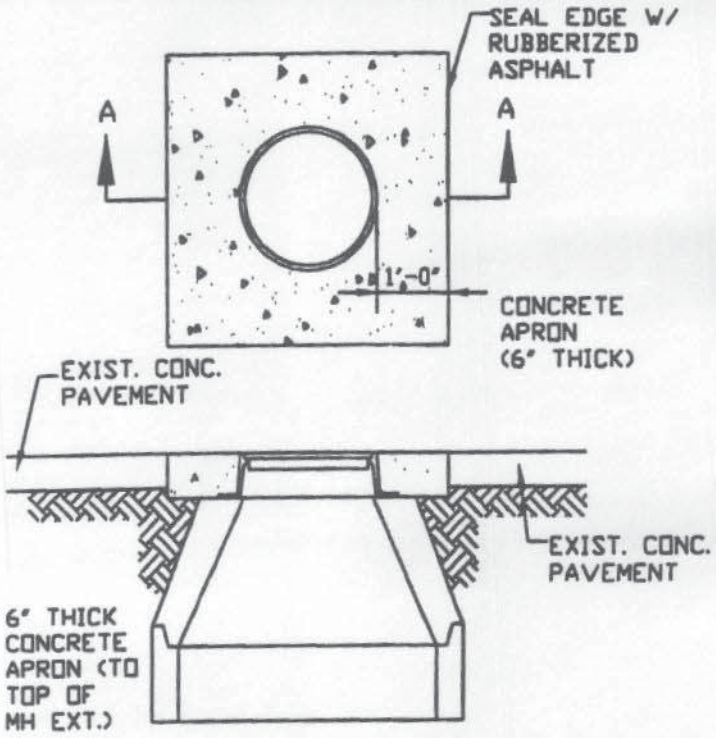

SECTION "A"

MANHOLE IN CONCRETE, ADJUST TO GRADE

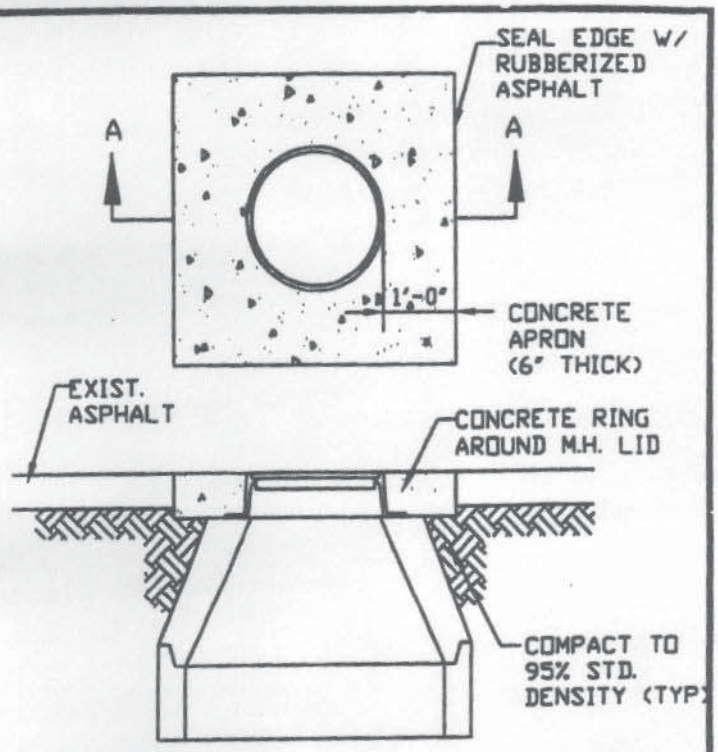

SECTION "A"

MANHOLE IN ASPHALT, ADJUST TO GRADE

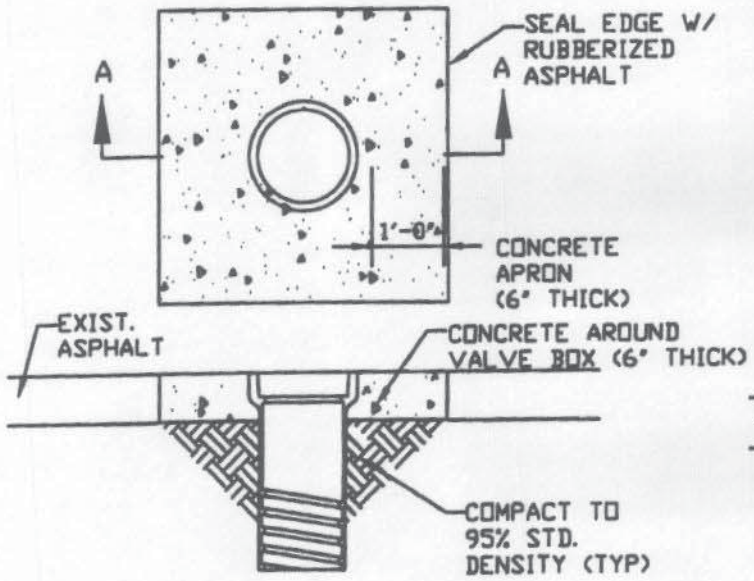

SECTION "A"

WATER VALVE TO GRADE IN ASPHALT

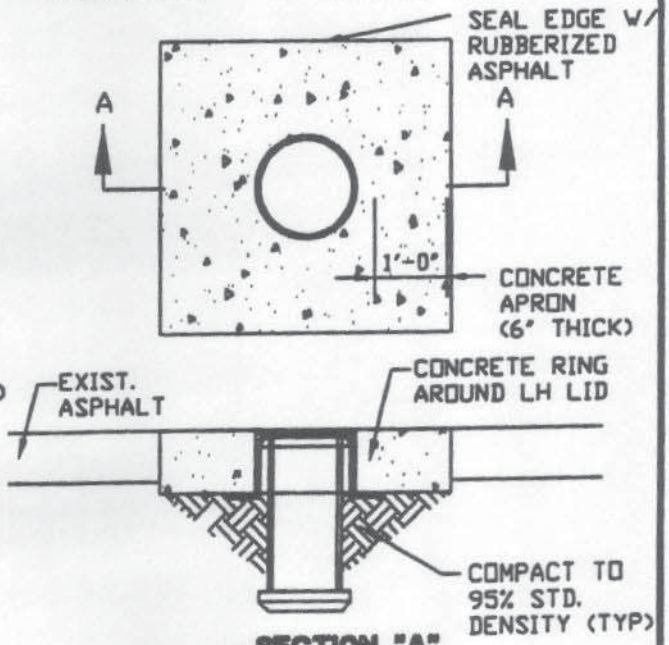

SECTION "A"

LAMPHOLE IN ASPHALT ADJUST TO GRADE

MANHOLES, LAMPHOLES, AND VALVE BOXES IN STREETS

CITY OF COWETA	STANDARD DRAWING: STD ST 14
	LAST REVISION DATE:

DRAWN BY:	CHECKED BY:	APPROVED BY:

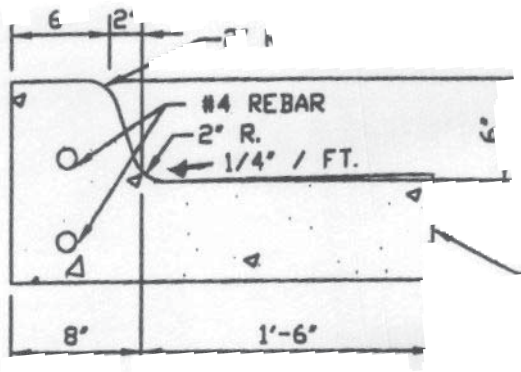

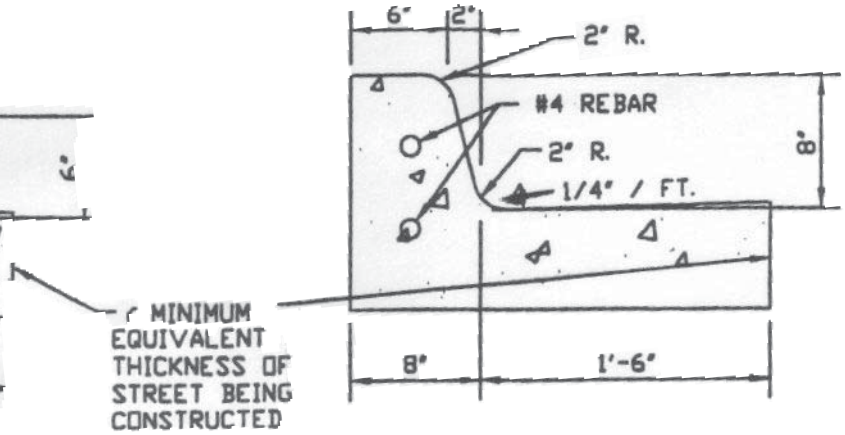

6" BARRIER CURB & GUTTER

8" BARRIER CURB & GUTTER

NOTE:
SEE SECTION 204.05 FOR DETAIL ON JOINTS AND TIEBARS

CURB AND GUTTER DETAIL

CITY OF COWETA

STANDARD DRAWING

DRAWN BY:

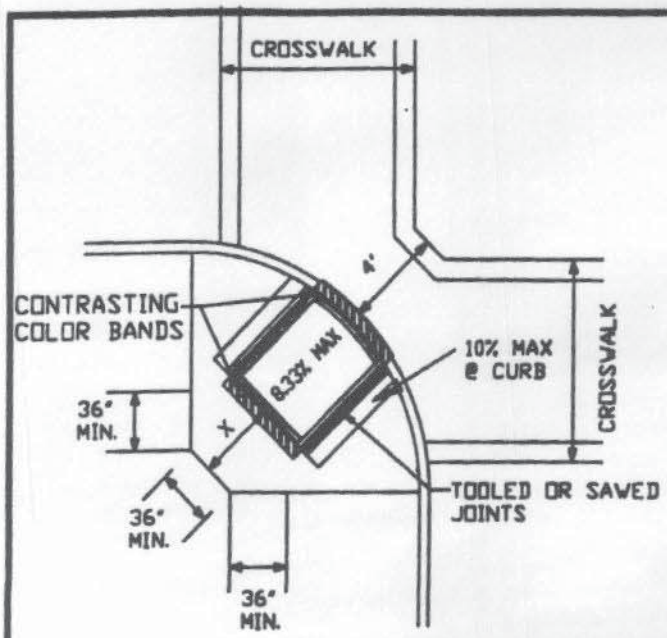

CORNER RAMP

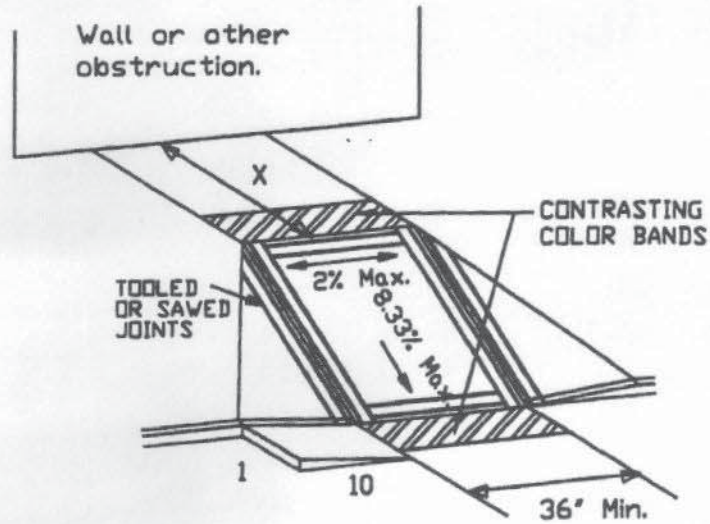

SIDE RAMP

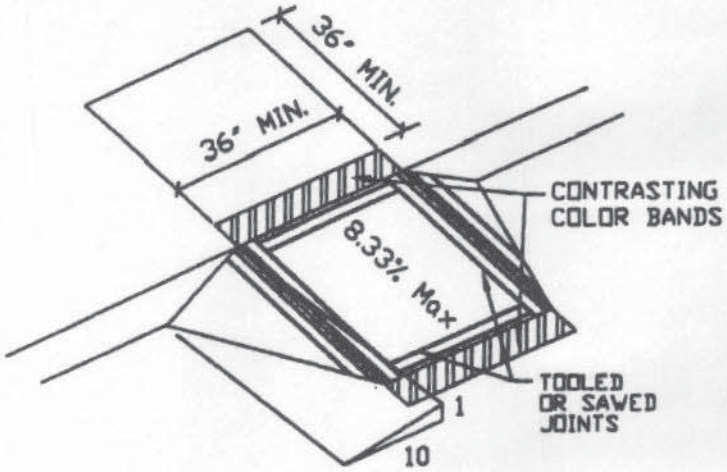

BUILT UP RAMP

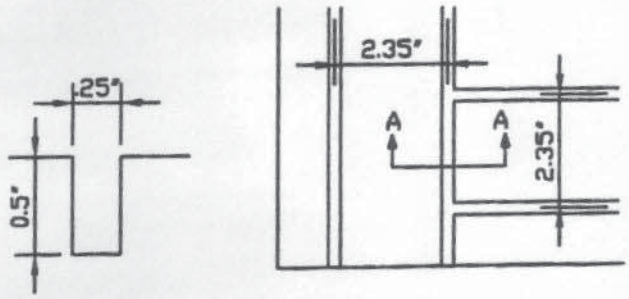

SECTION A-A

PLAN VIEW

TOOLED OR SAWED JOINTS

NOTES:

1. DETECTABLE WARNING, CONTRASTING COLOR BANDS, SHALL CONTRAST VISUALLY WITH ADJOINING SURFACE, EITHER LIGHT ON DARK, OR DARK ON LIGHT.
2. THE MATERIAL USED TO PROVIDE CONTRAST SHALL BE AN INTEGRAL PART OF THE WALKING SURFACE.
3. CROSS SLOPE OF LANDING AREA DOES NOT EXCEED 2% IN ANY DIRECTION.
4. WHEN X IS LESS THAN 48", THE SLOPE OF THE FANNED OR FLARED SIDES MUST NOT EXCEED 1:12 (8.33%)
5. BUILT UP RAMPS ARE <u>NOT</u> ALLOWED TO ENCROACH INTO LOADING/UNLOADING ZONES PARKING SPACES OR VEHICULAR TRAFFIC LANES.

SIDEWALK & WHEELCHAIR RAMP DETAIL

CITY OF COWETA	STANDARD DRAWING: STD ST 06
	LAST REVISION DATE:
DRAWN BY:	CHECKED BY:

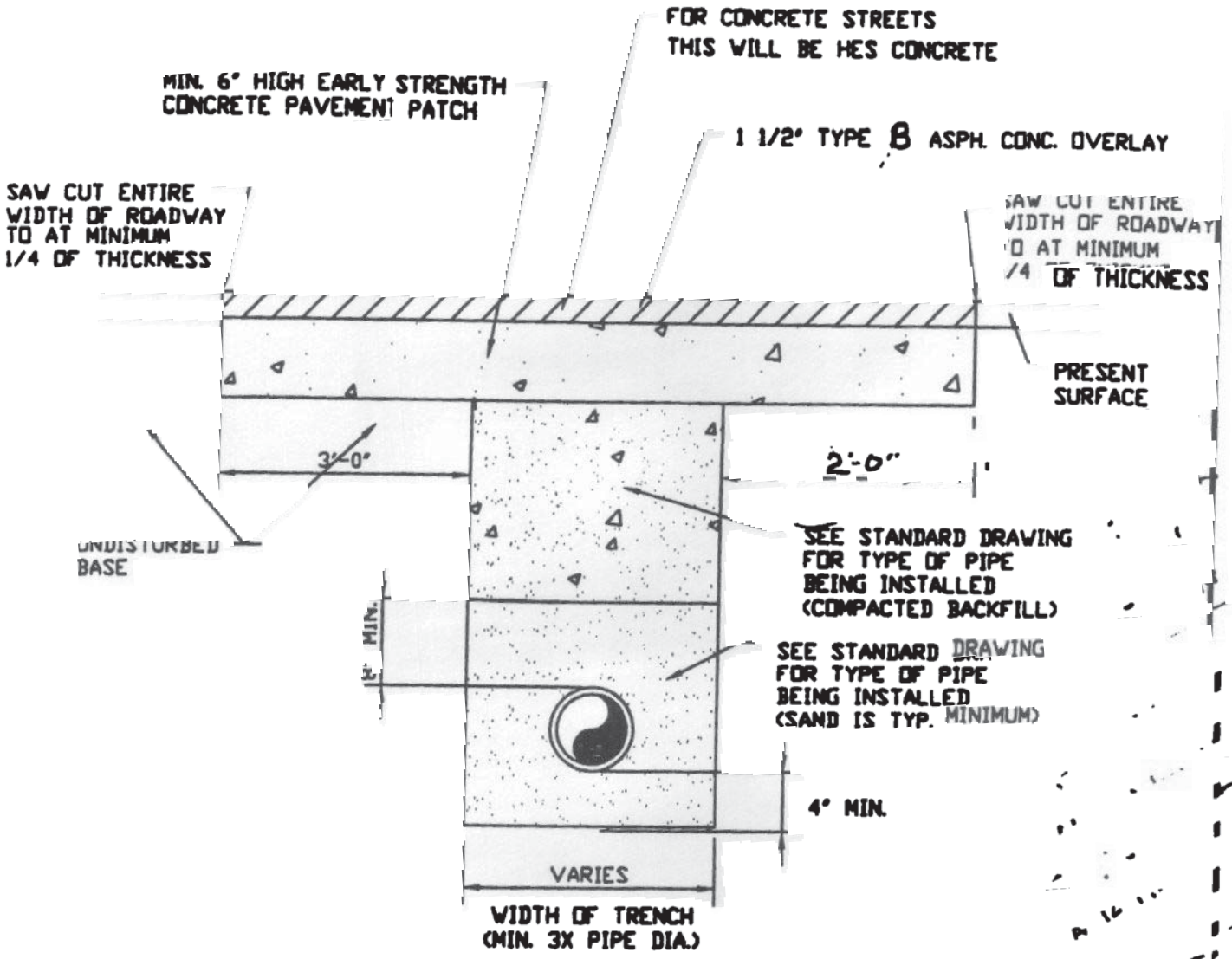

USE THIS DETAIL WHERE IT IS NECESSARY TO CUT THE PRESENT SURFACE FOR REMOVAL OR CONSTRUCTION OF AN UNDERGROUND FACILITY

NOTES:

1. CONCRETE TO BE PLACED ONE HALF OF ROADWAY AT A TIME AND CURED FOR THREE (3) DAYS PRIOR TO USE OR PLACEMENT OF 1-1/2" ASPHALT OVERLAY.
2. NEW SURFACE TO TRANSITION SMOOTHLY TO EXISTING PAVEMENT.
3. STRENGTH OF PATCH MUST EQUAL OR EXCEED EXISTING STREET STRENGTH.
4. ASPHALT TACKCOAT IS REQUIRED ON ALL SURFACES PER MANUFACTURER'S RECOMMENDATIONS PRIOR TO PLACEMENT OF THE OVERLAY

STREET PATCH DETAIL

CITY OF COWETA | STANDARD DRAW DATE:

DRAWN BY: CHECKED BY:

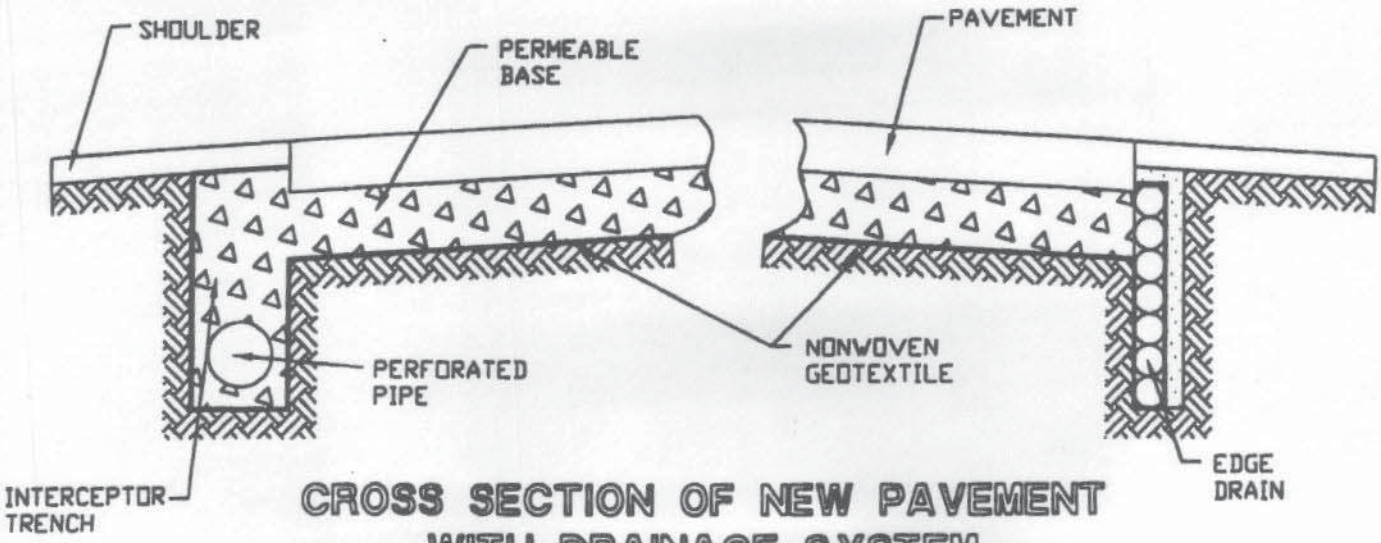

CROSS SECTION OF NEW PAVEMENT WITH DRAINAGE SYSTEM

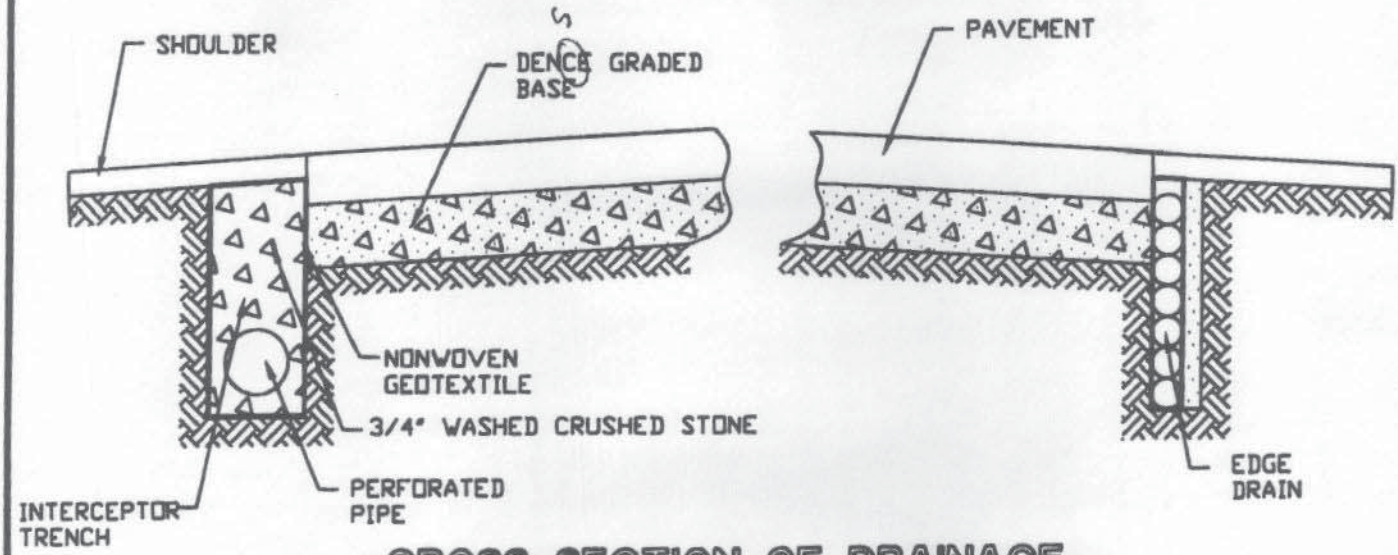

CROSS SECTION OF DRAINAGE IMPROVEMENT TO EXISTING PAVEMENT

NOTES:
1. MINIMUM PERFORATED PIPE SIZE IS 4" DIAMETER.
2. PERFORATED PIPES SHALL BE TIED TO THE STORM SEWER SYSTEM.
3. ON STREETS WITH CURB AND GUTTER, THE DRAIN SHALL BE OUTSIDE BUT ADJACENT TO THE CURB.

BASE DRAINAGE

CITY OF COWETA	STANDARD DRAWING: STD ST 08
	LAST REVISION DATE:

DRAWN BY:	CHECKED BY:	APPROVED:	DATE:

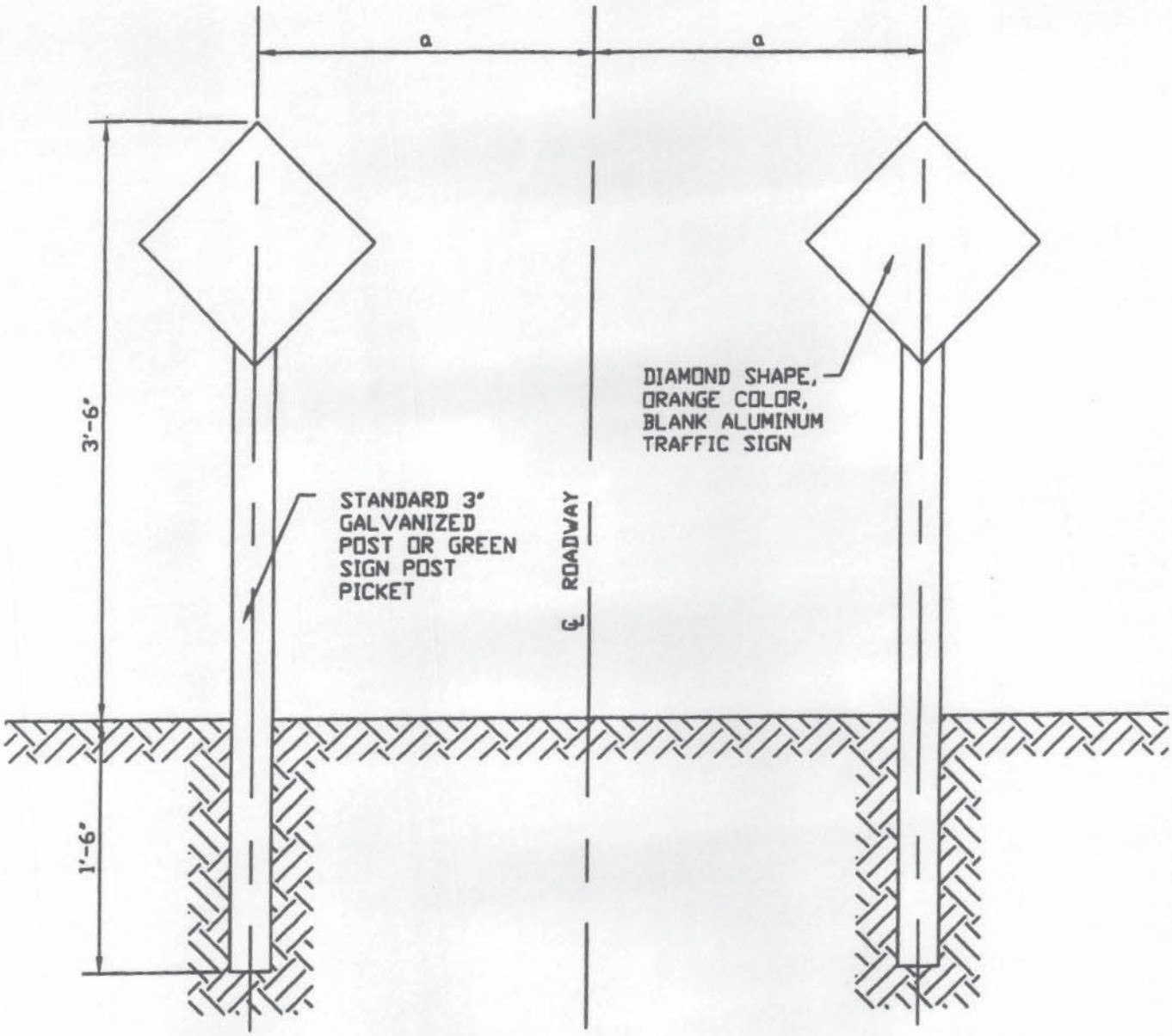

NOTES:
1. FOR ROADWAY 26' WIDE = 6'-6"
2. FOR ROADWAY 36' WIDE = 9'-0"
3. FOR ROADWAY 42' WIDE = 10'-6"

BARRICADE DETAIL

CITY OF COWETA	STANDARD DRAWING: STD ST 09
	LAST REVISION DATE:

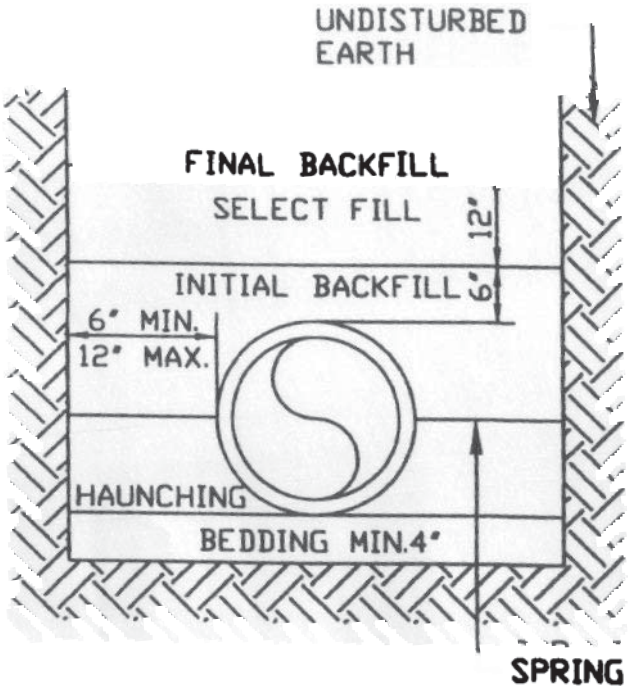

NON-PAVED AREAS		
HDPE	STEEL	CONCRETE
EXCAVATED MATERIAL	EXCAVATED MATERIAL	EXCAVATED MATERIAL
SELECT FILL	SELECT FILL	SELECT FILL
ODOT STD. BEDDING	ODOT STD. BEDDING	ODOT STD. BEDDING
ODOT STD. BEDDING	ODOT STD. BEDDING	ODOT STD. BEDDING
ODOT CLASS B	ODOT CLASS B	ODOT CLASS B

PAVED AREAS		
HDPE	STEEL	CONCRETE
FLOWABLE FILL	FLOWABLE FILL	FLOWABLE FILL OR TYPE A ROCK
FLOWABLE FILL	FLOWABLE FILL	FLOWABLE FILL OR TYPE A ROCK
FLOWABLE FILL	FLOWABLE FILL	FLOWABLE FILL OR TYPE A ROCK
ODOT STD. BEDDING	ODOT STD. BEDDING	ODOT STD. BEDDING
ODOT CLASS B	ODOT CLASS B	ODOT CLASS B

NOTES:
1. SELECT FILL CONSISTS OF EXCAVATED MATERIALS CONTAINING NO ROCKS LARGER THAN 2 INCHES.
2. BEDDING REQUIRED FOR ALL STORM SEWER REPLACEMENT PROJECTS, IN ROCK EXCAVATION, AND FOR LEVELING TRENCH IN NEW INSTALLATION.
3. COMPACTION REQUIREMENTS:
   a. NON-PAVED AREAS: 90% MAXIMUM STANDARD PROCTOR DENSITY FOR COHESIONLESS SOILS AND 85% FOR COHESIVE SOILS.
   b. PAVED AREAS: 95% MAXIMUM STANDARD PROCTOR DENSITY FOR COHESIONLESS SOILS.
4. FLOWABLE FILL MAY BE SUBSTITUTED FOR ALL MATERIALS IN ROAD CROSSING.

ORM SEWER PIPE BEDDING

ITY OF COWETA

EDDING DETAIL

TY OF COWETA

STAND ST 01

LAST REVISION

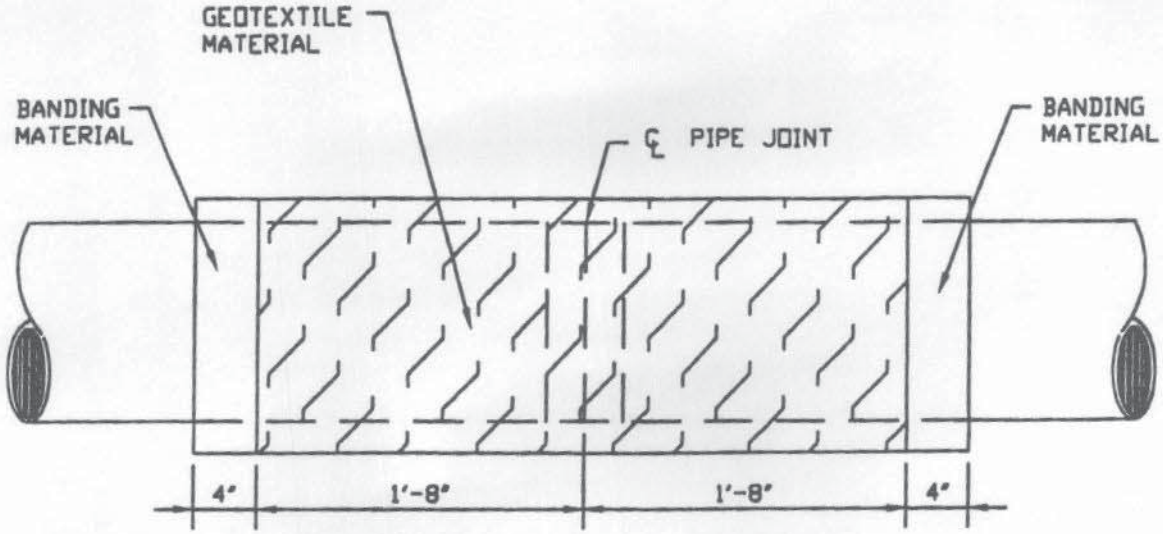

SIDE VIEW

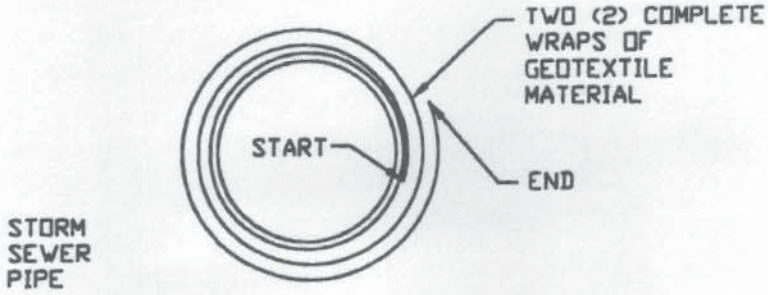

END VIEW

STORM SEWER JOINT WRAPPING DETAIL

CITY OF COWETA	STANDARD DRAWING: STD ST 02
	LAST REVISION DATE:

DRAWN BY:

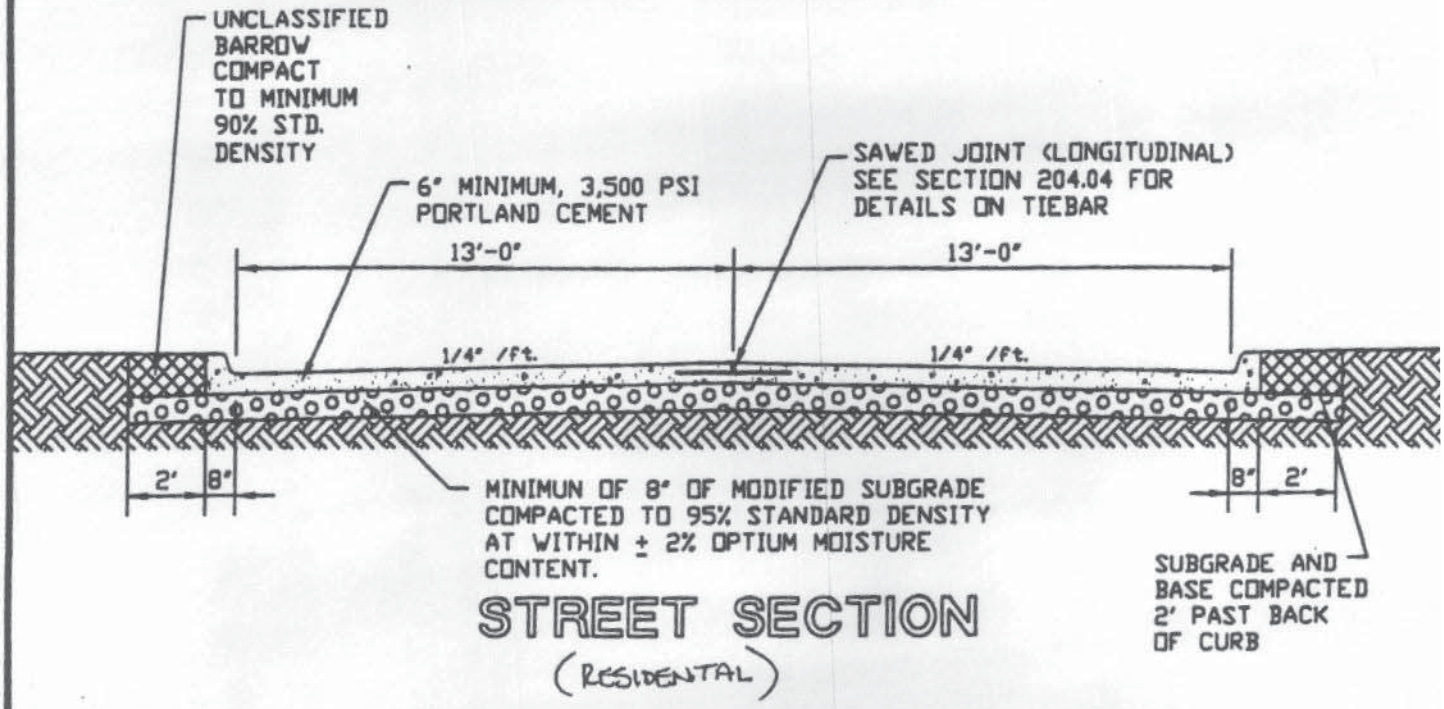

STREET SECTION

(RESIDENTAL)

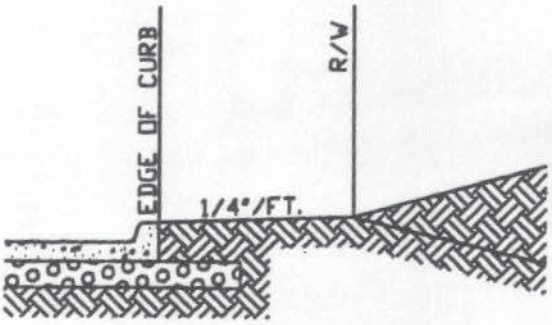

NORMAL CONDITIONS

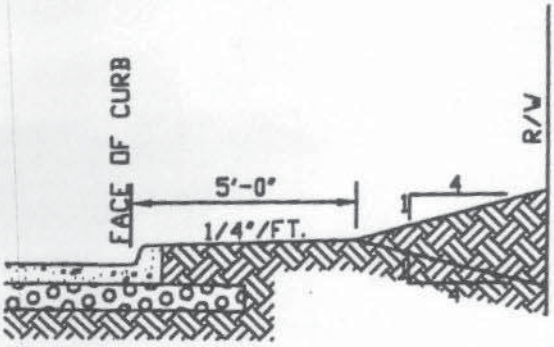

HILLY CONDITIONS

RIGHT OF WAY GRADING

CONCRETE STREET SECTION W/ CURB AND GUTTER

CITY OF COWETA	STANDARD DRAWING: STD ST 03
	LAST REVISION DATE:

DRAWN BY:	CHECKED BY:	APPROVED

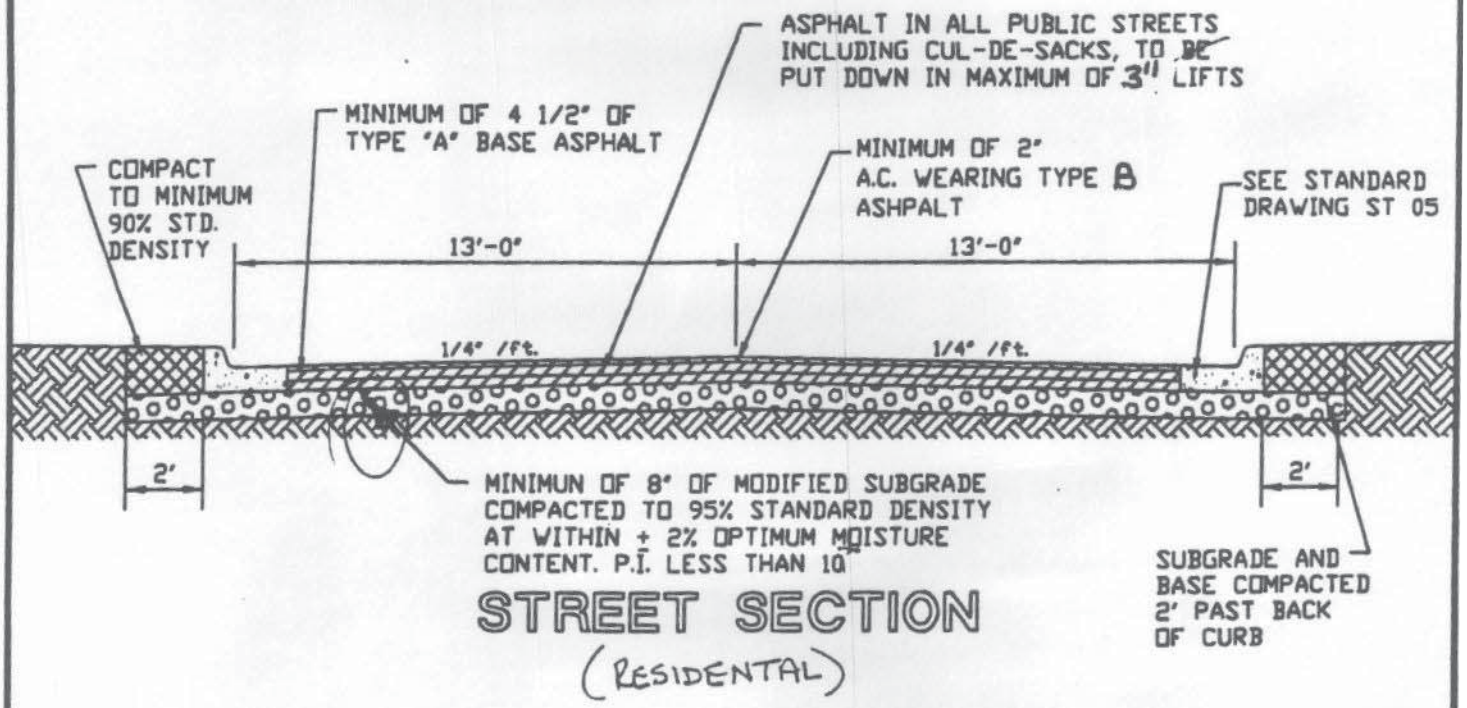

STREET SECTION

(RESIDENTAL)

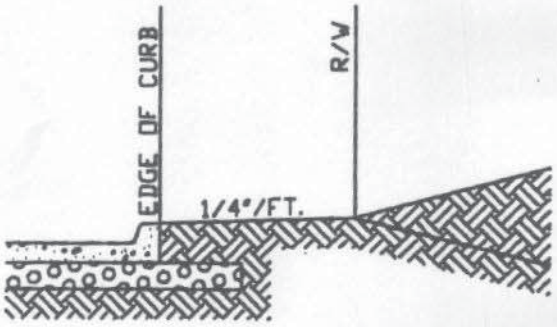

NORMAL CONDITIONS

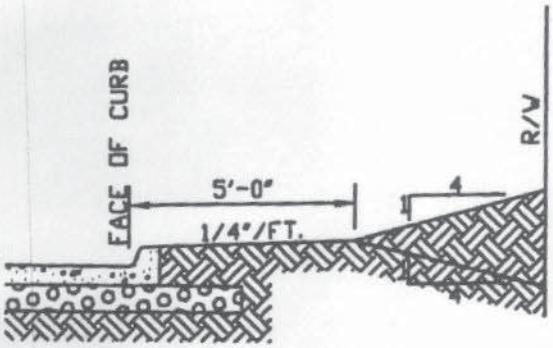

HILLY CONDITIONS

RIGHT OF WAY GRADING

ASPHALT STREET SECTION W/ CURB AND GUTTER

CITY OF COWETA	STANDARD DRAWING: STD ST 04
	LAST REVISION DATE:

DRAWN BY:	CHECKED BY:	APPROVED: